8. Exploded Views and Parts List (CLP-650/SEE)

Contents

8.1 Main 8-2
8.2 Front Cover 8-3
8.3 Top Cover 8-4
8.4 Right Cover 8-5
8.5 Base Frame 8-6
8.6 Main Frame 8-7
8.7 Fuser 8-8
8.8 Main Drive 8-9
8.9 MPF 8-10
8.10 Pick Up 8-11
8.11 Guide Paper 8-12
8.12 Cassette Unit 8-13
8.13. Cassette(SCF) 8-14
8.14. SCF 8-15
8.15. Guide Upper(SCF) 8-16
8.16. Guide Lower(SCF) 8-17

Part Number & Description format.

Part numbers and descriptions are defined according to a company standard. The information below will help you to understand the part number format and assist when ordering spare parts.

• **There are two types of Part number format.**

●●●●–●●●●●● ex) 2007-007961 R-CHIP

■■●●–●●●●●■ ex) JB96-01268A ELA UNIT-COVER TOP

It shows part specific

(● : number ■ : letter)

Type 1 : This format is used throughout Samsung on all product ranges.
Typically it is used for small components and electronic parts.

Type 2 : This format is controlled by individual Samsung Divisions and is used on specific products, typically for mechanical parts. Type 2 format part numbers fall into 2 categories:

• **A/S privately used part :** It is only used for A/S .

• **Ass'y part :** Assemblies consisting of 2 or more parts. Also used for Service manuals, user guides and diagrams.

• Ass'y parts and A/S privately used Parts can be distinguished by the part Code and Description. They are always Type 2 format. The 2 leading characters indicate private or assembly parts.

DIVISION	PART CODE	DESCRIPTION
A/S Private	**81-****** (JB81-00039A)	AS-********* (AS-USE)
ASS'Y Part	**75-****** (JB75-00068A)	MEC-******** (MEC-CHUTE)
ASS'Y Part	**92-****** (JB92-01131A)	PBA ********* (PBA MAIN-CONTROLLER)
ASS'Y Part	**97-****** (JB97-01089A)	MEA ********* (MEA UNIT-PULLEY IDLE)

IT-Spares.eu

8.1 Main

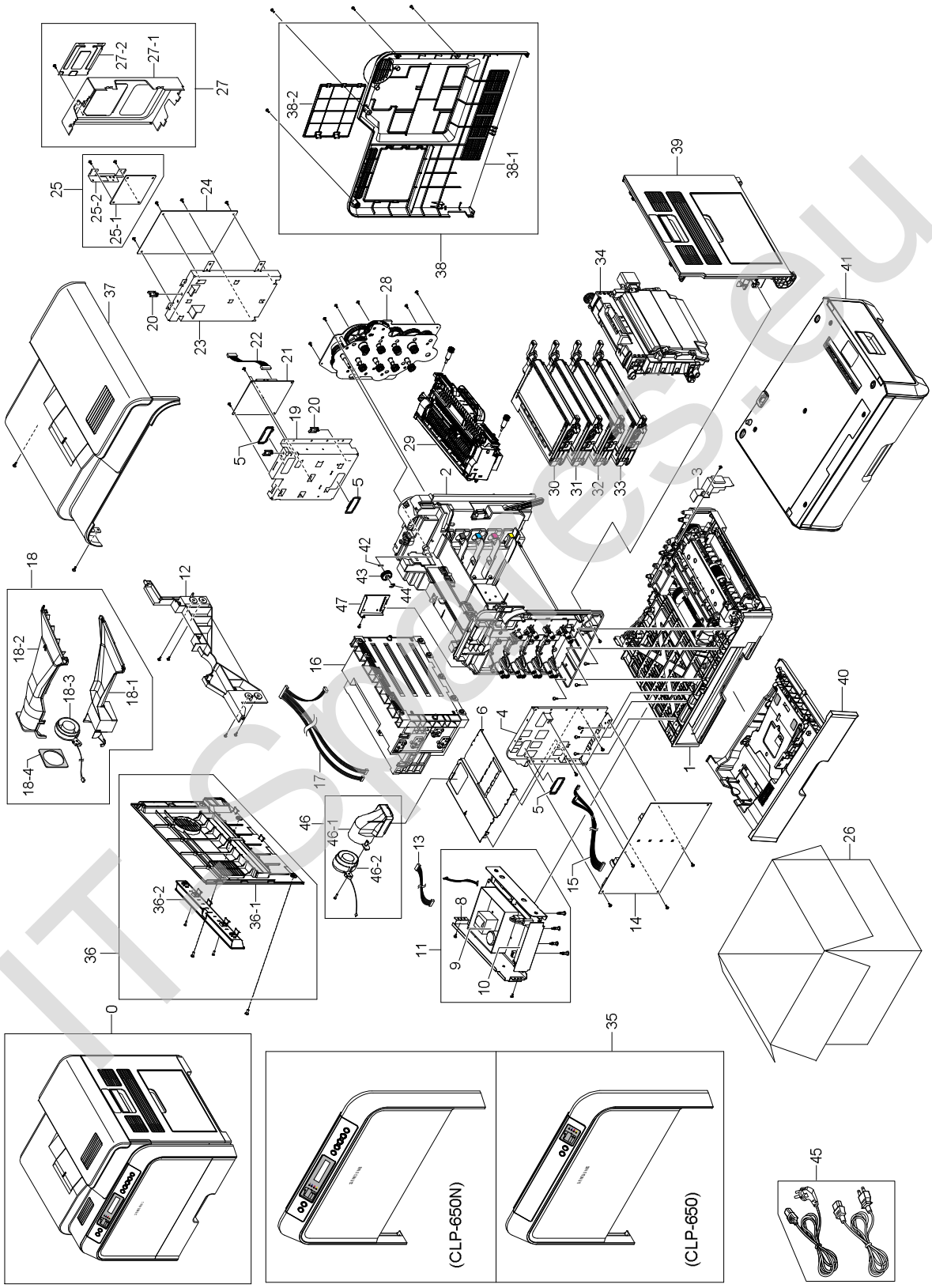

ITSpares.eu

8.2. Front Cover

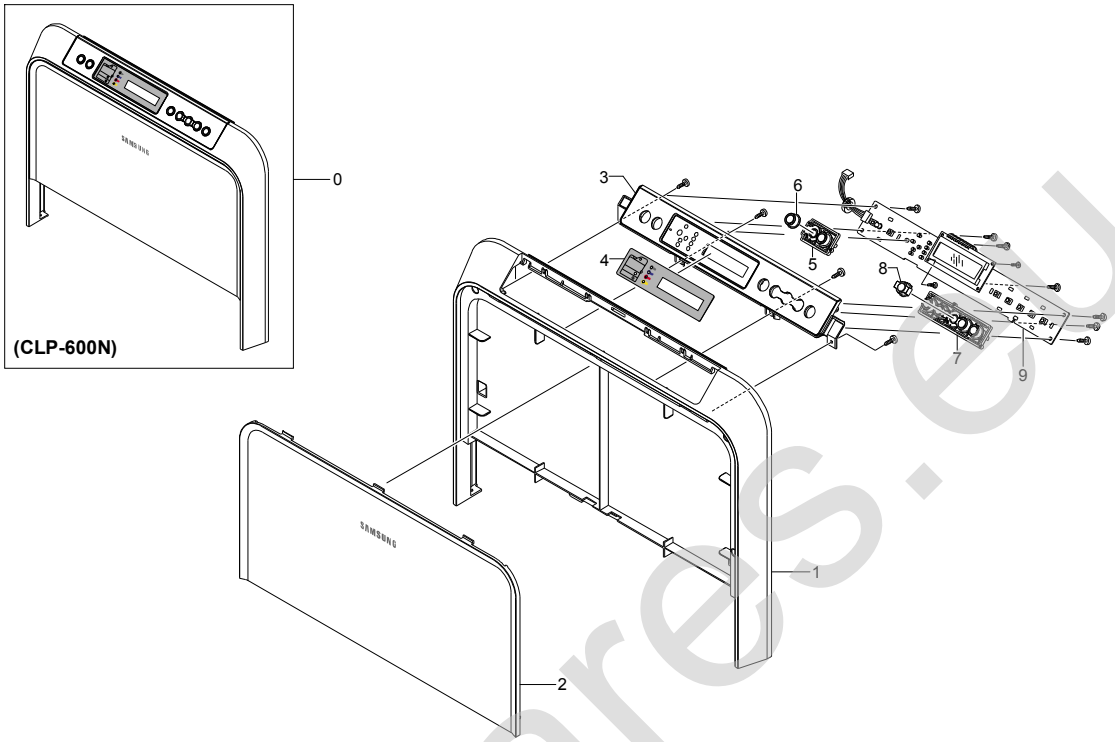

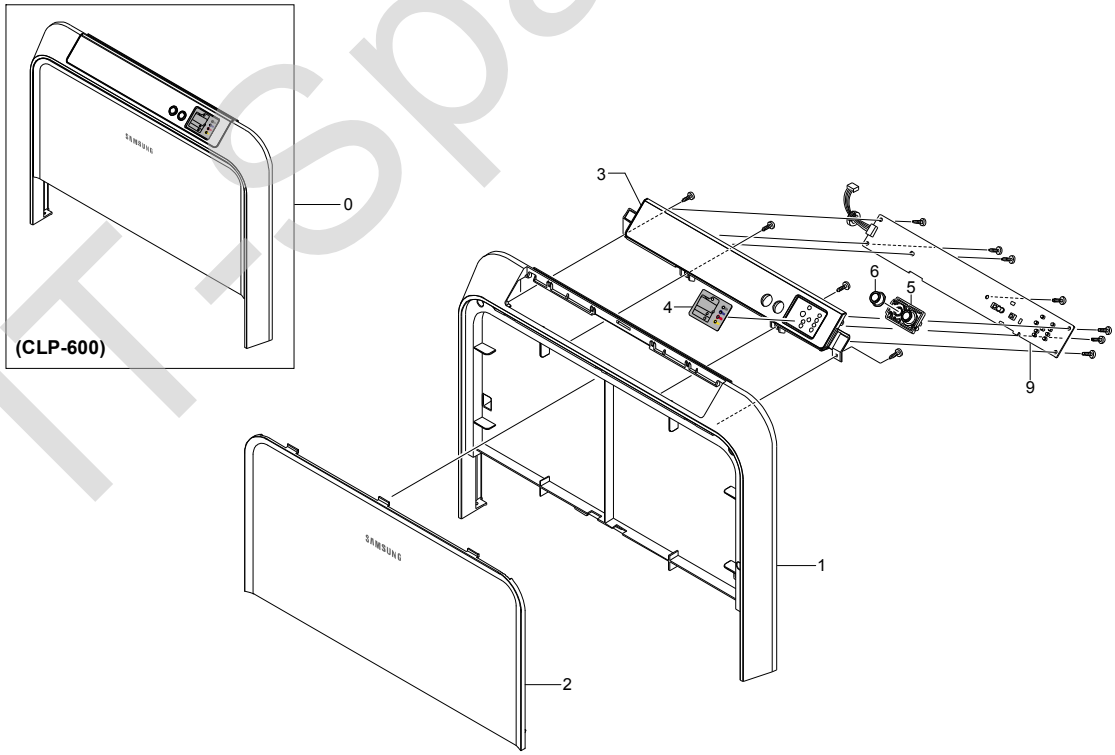

IT-Spares.eu

8.3. Top Cover

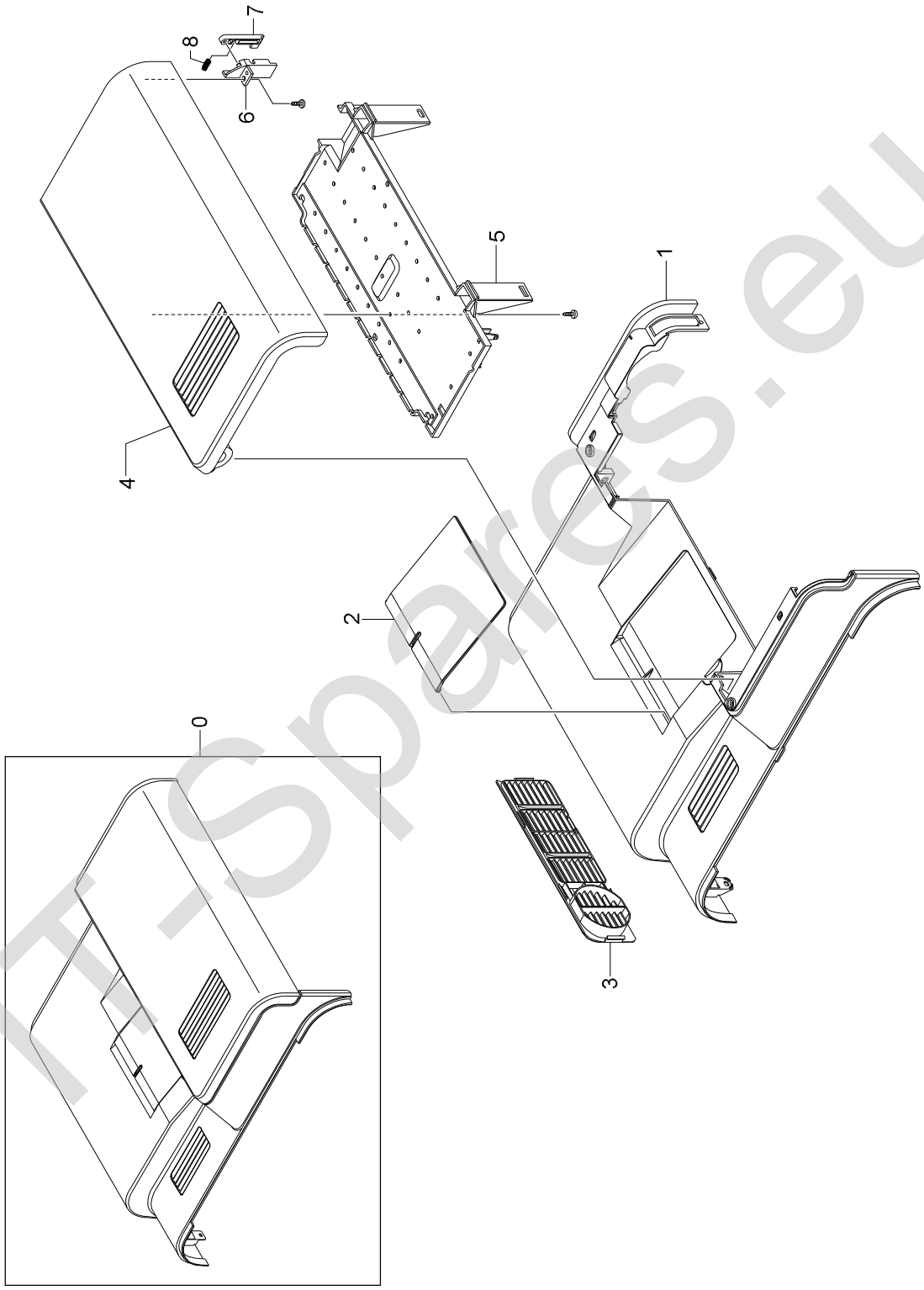

IT-Spares.eu

8.4. Right Cover

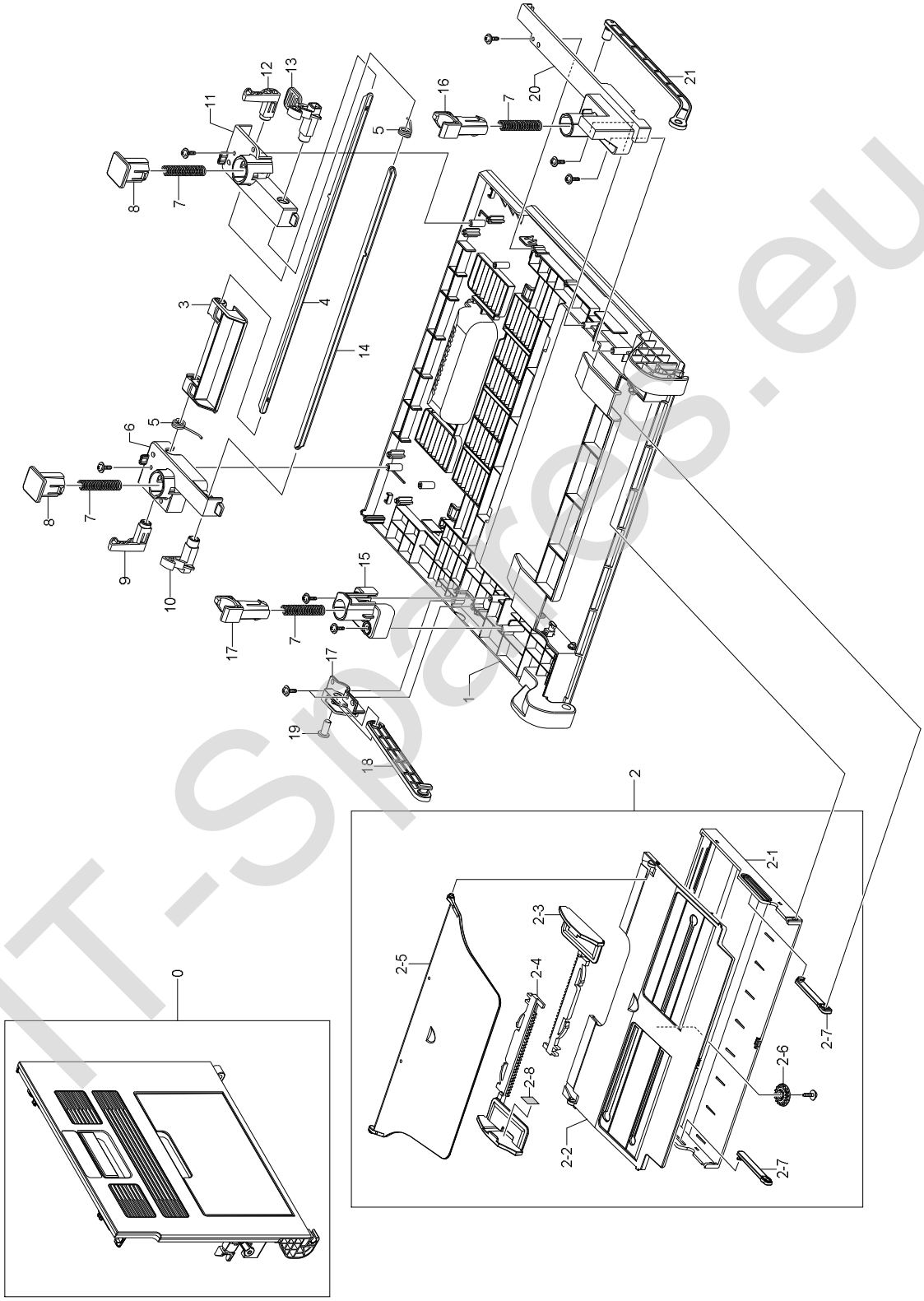

IT-Spares.eu

8.5. Base Frame

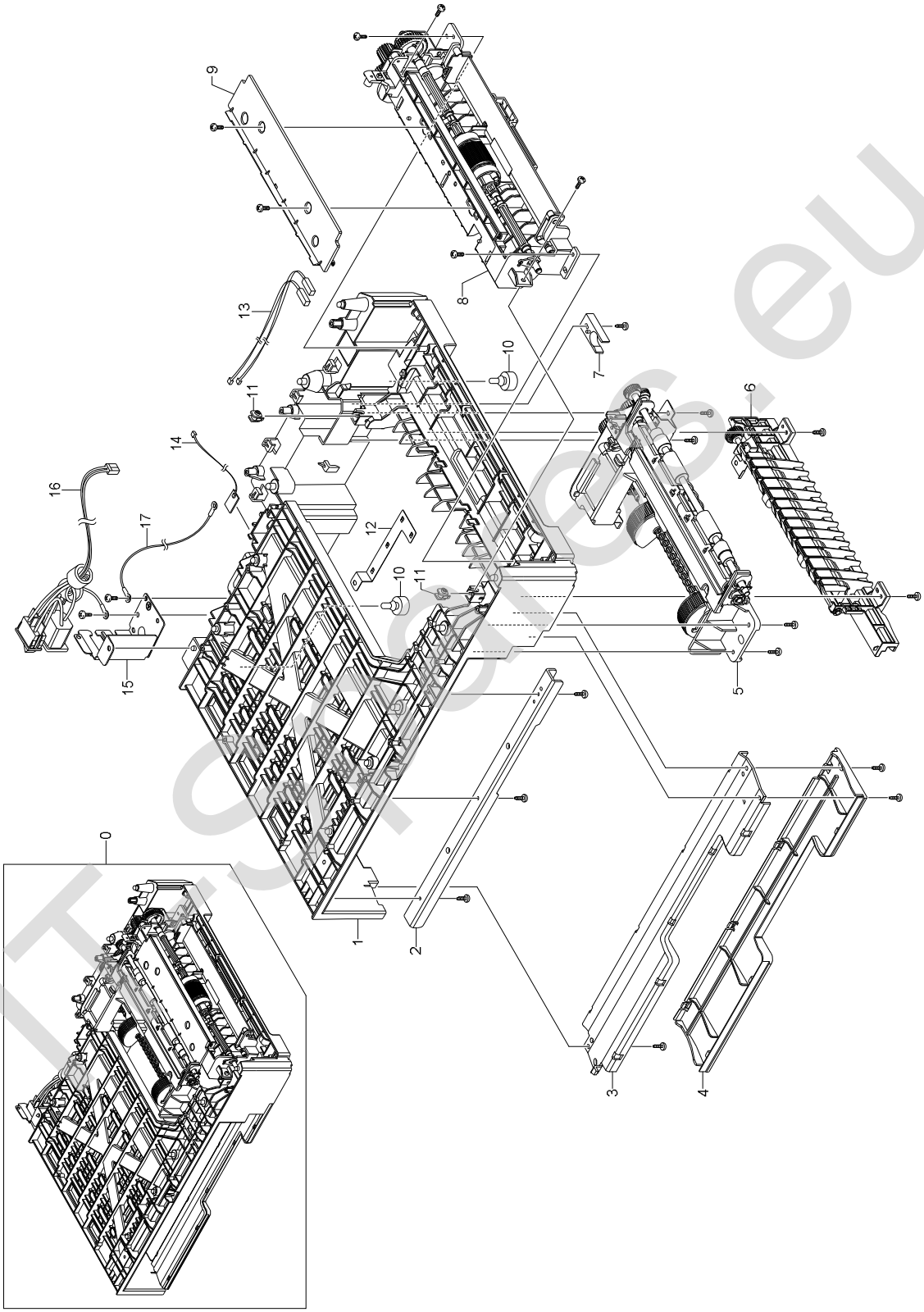

ITsales.eu

8.6. Main Frame

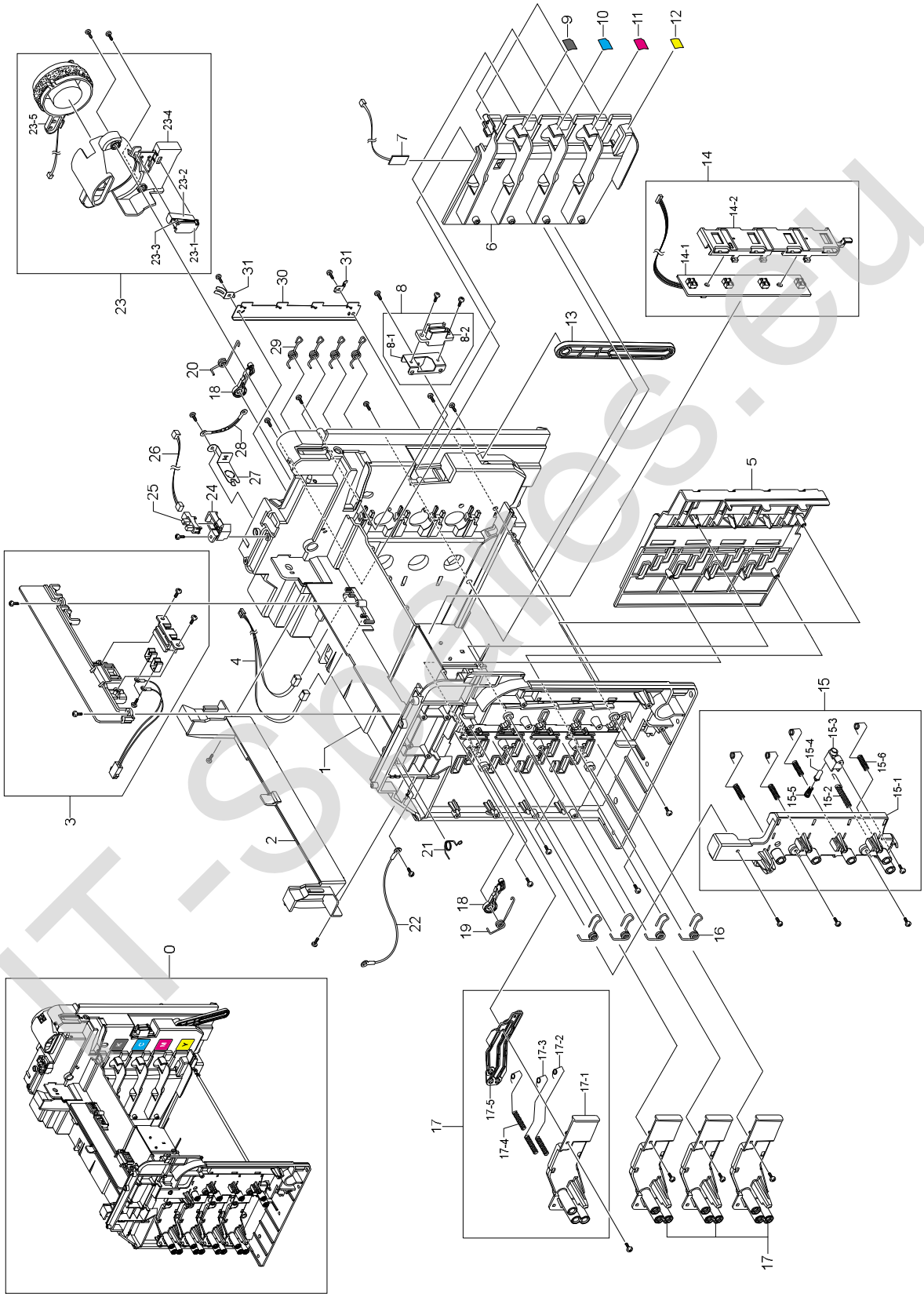

IT-spares.eu

8.7. Fuser

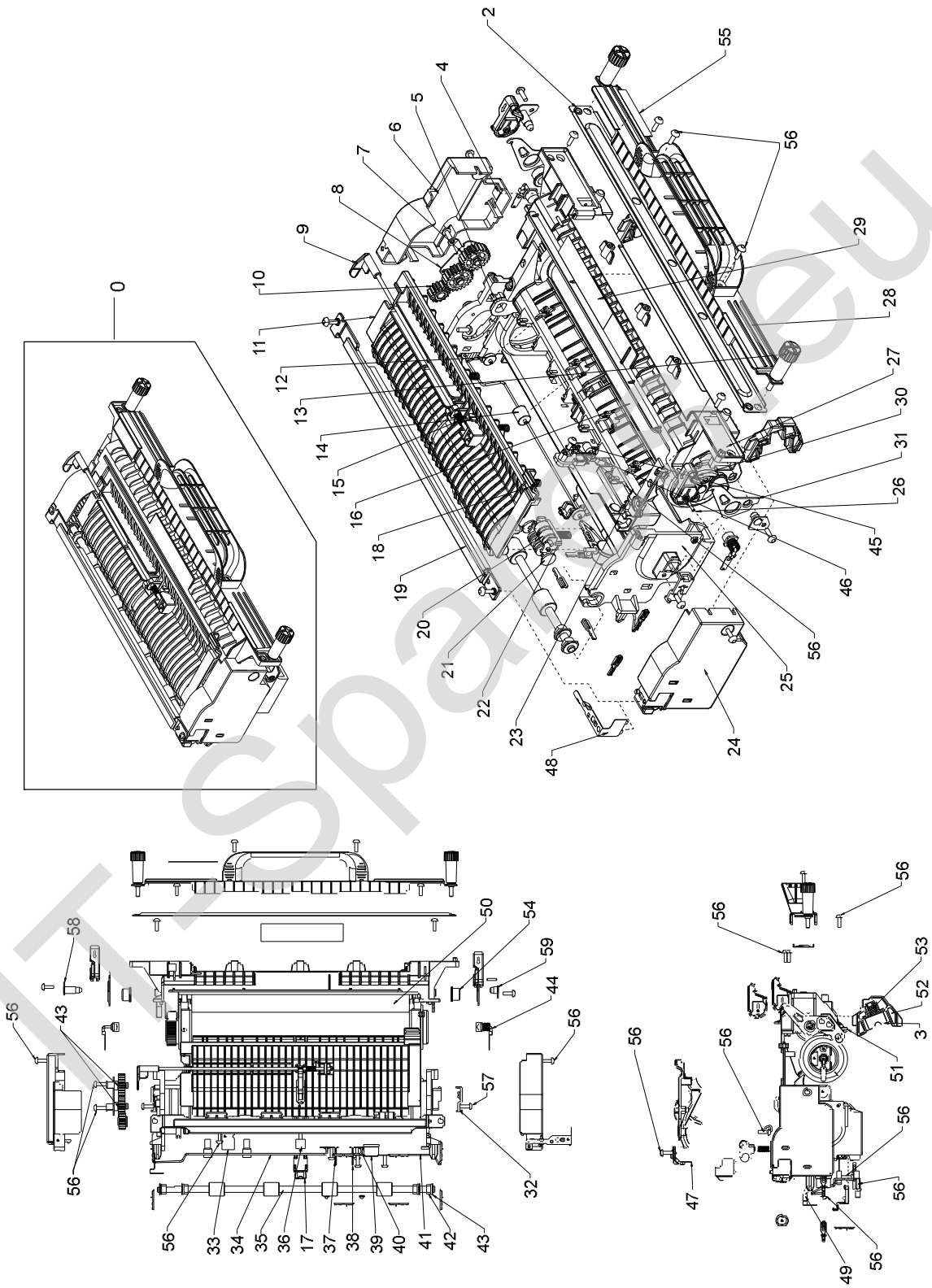

IT-Spare.eu

8.8. Main Drive

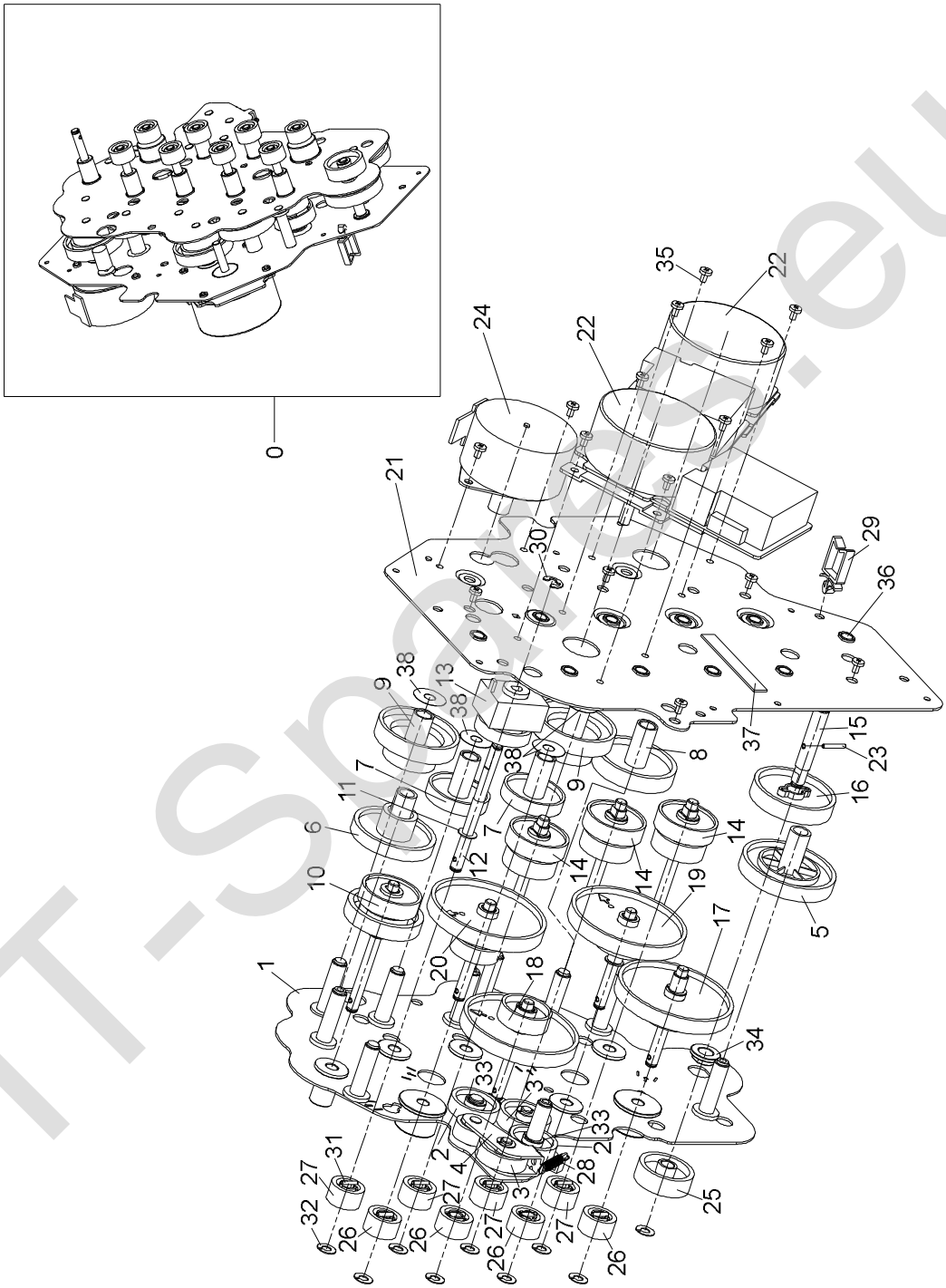

IT-Spares.eu

8.9. MPF

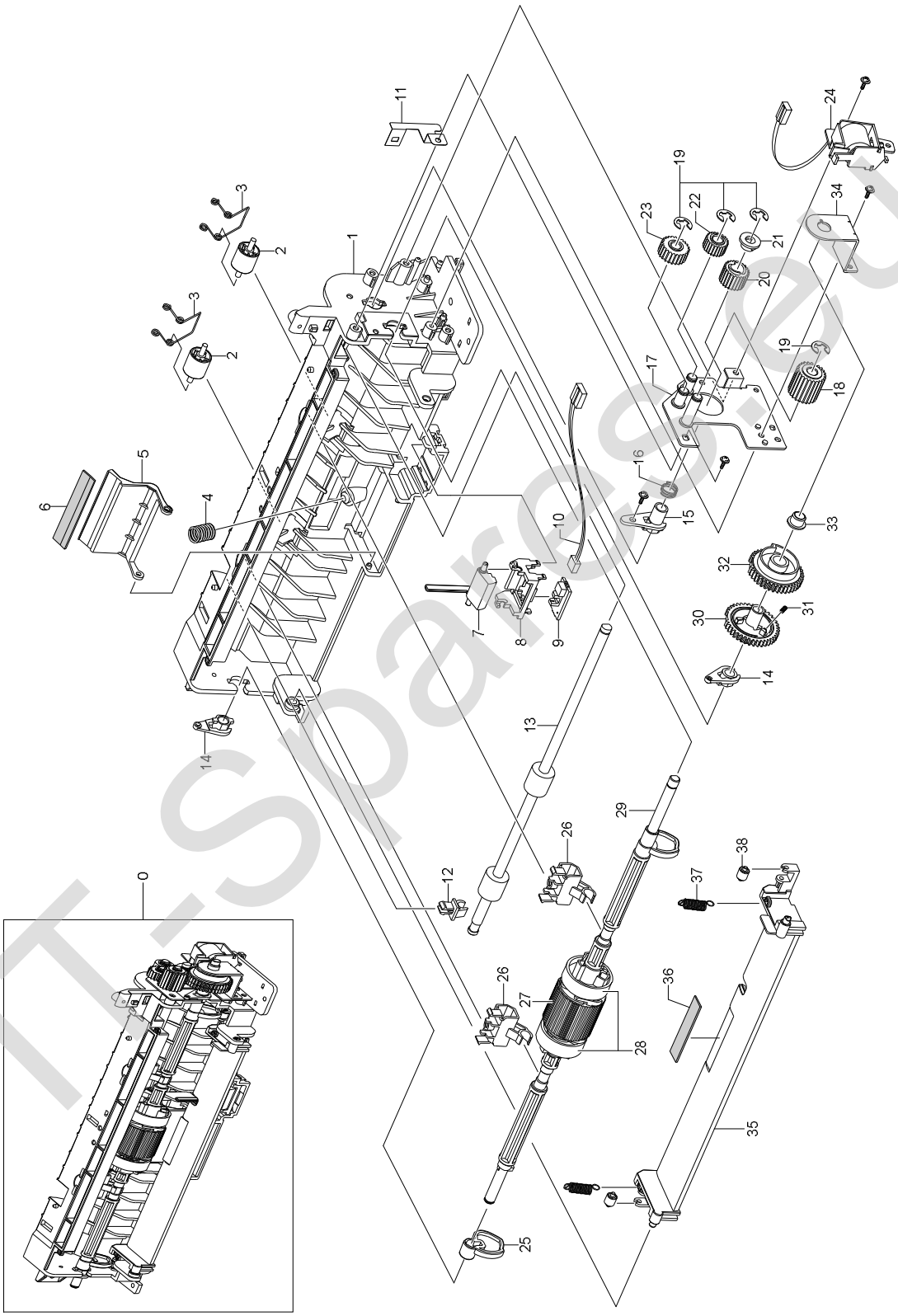

IT-Spares.eu

8.10. Pick Up

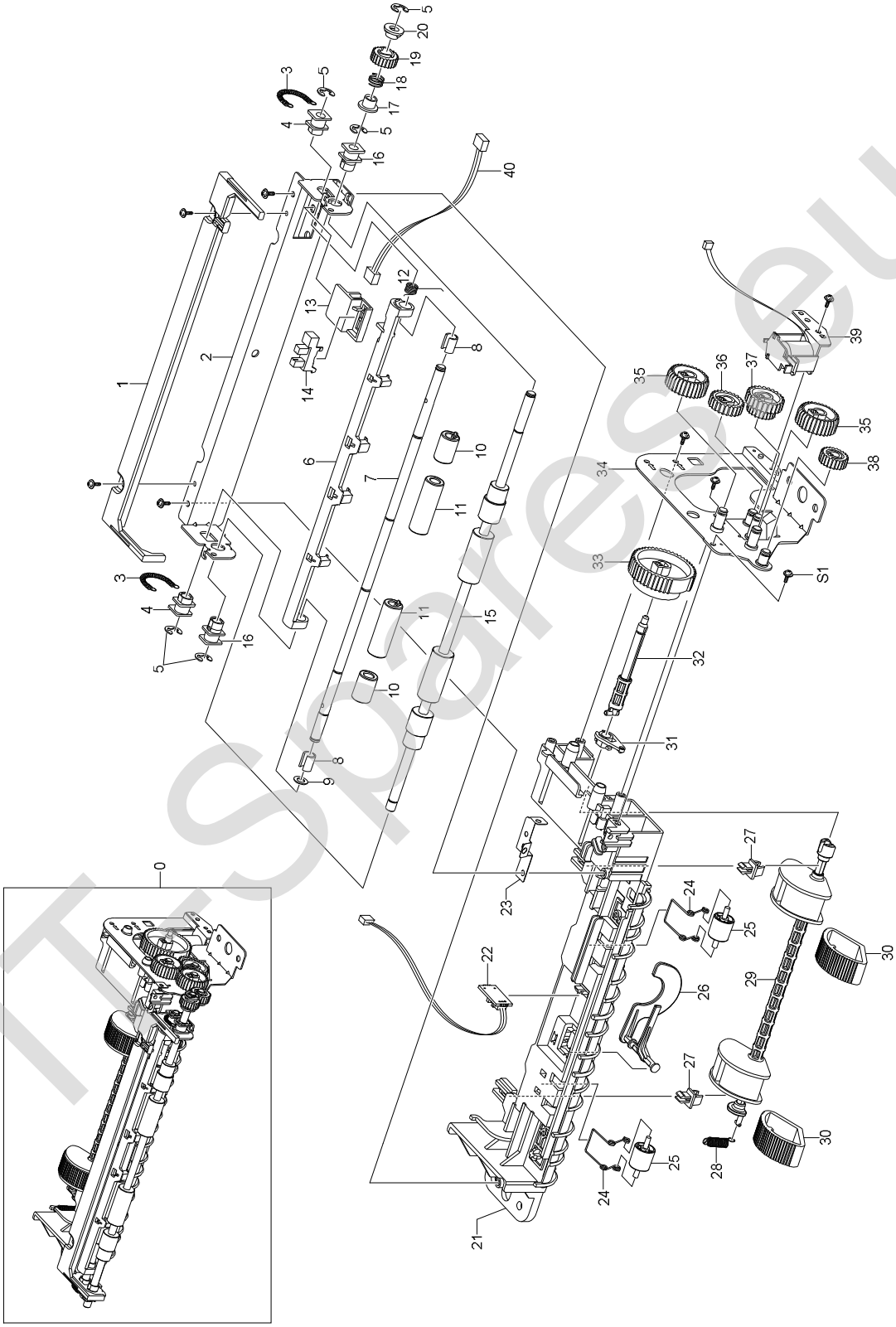

ITSpares.eu

8.11. Guide Paper

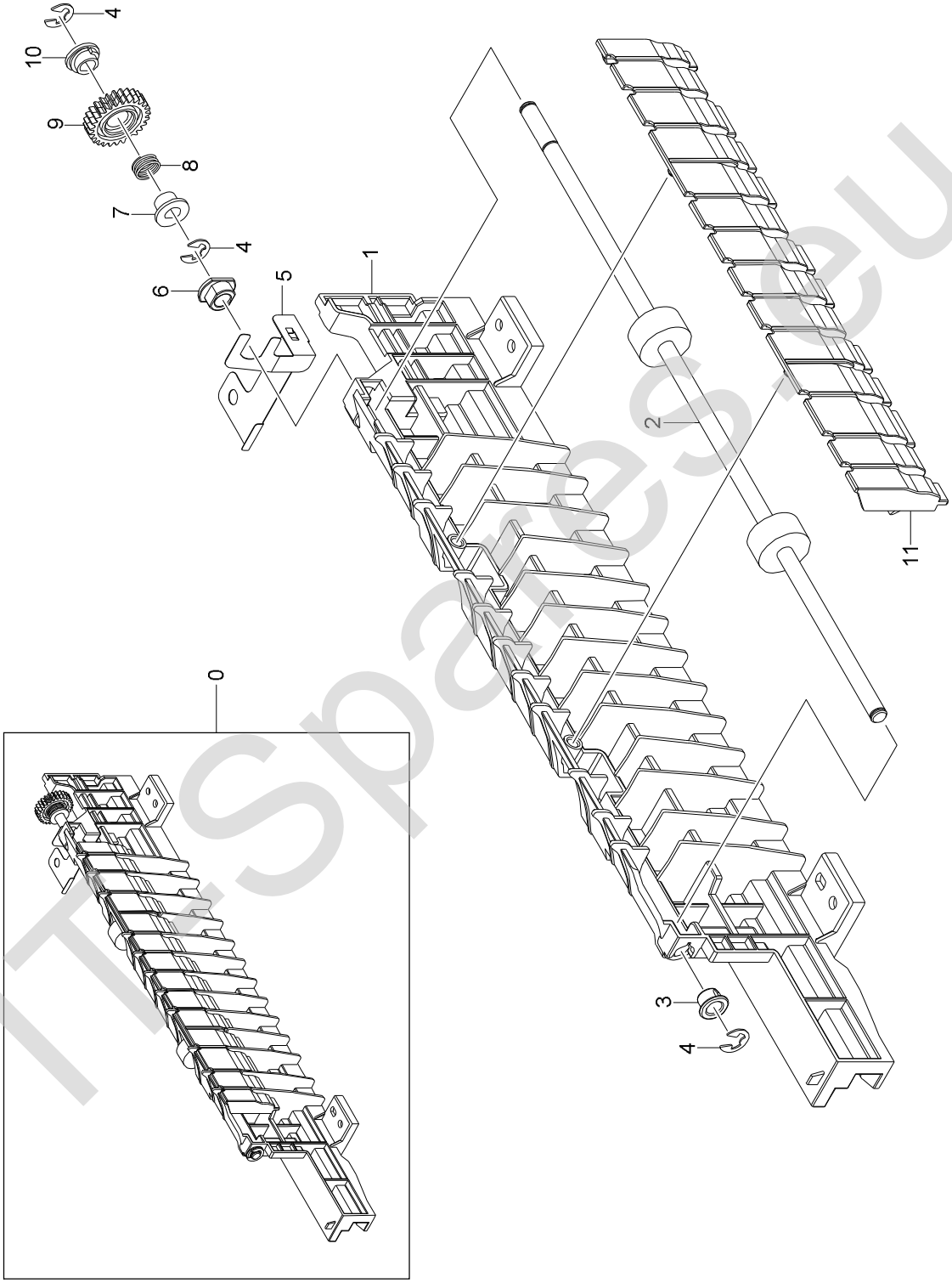

ITSpares.eu

8.12. Cassette Unit

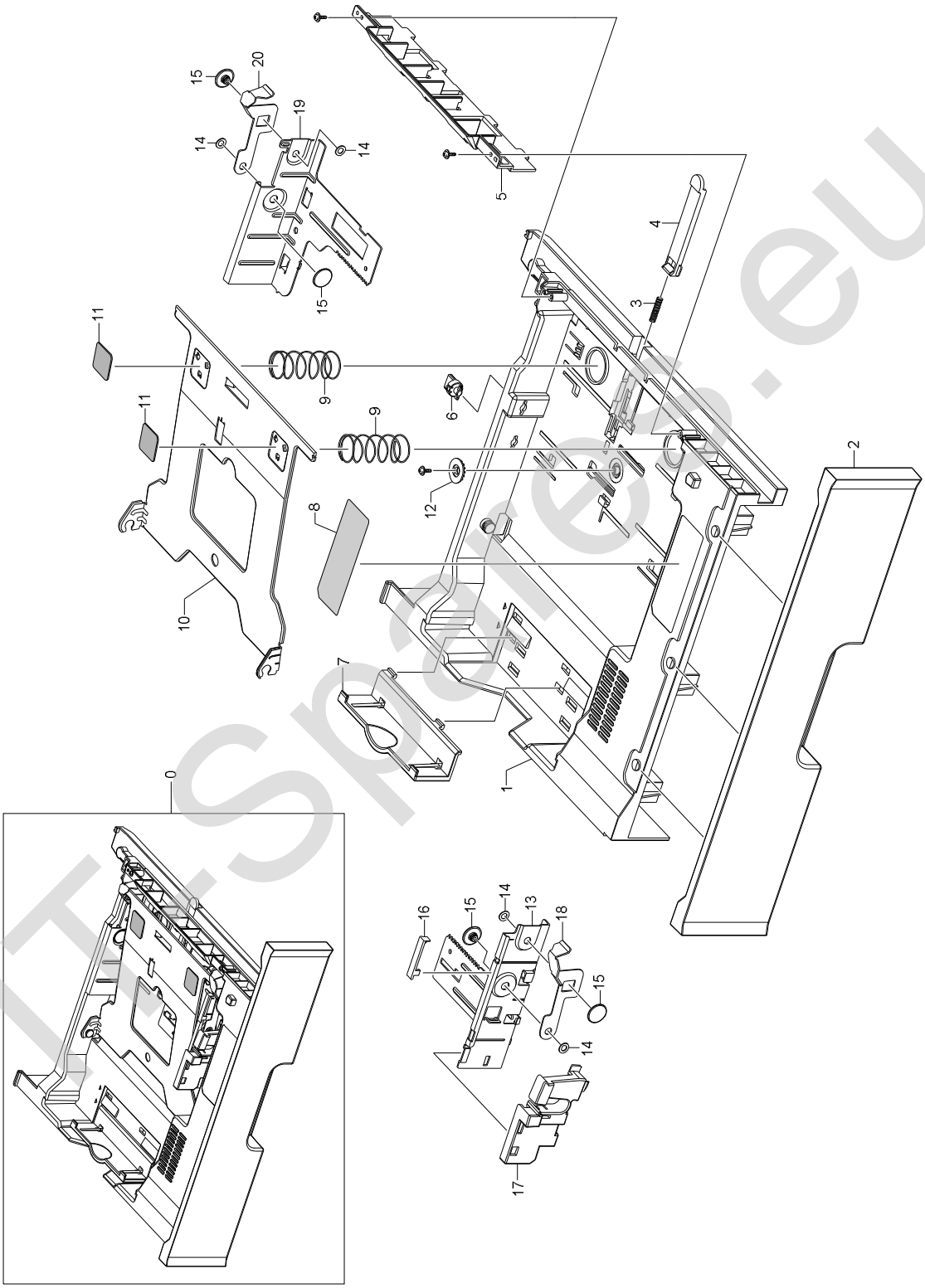

IT-Spares.eu

Service Parts List (Model code : CLP-650/SEE)

SA : SERVICE AVAILABLE SNA : SERVICE not AVAILABLE DNA : DELIVERY not AVAILABLE

Drawer#	SEC-Code	Description & Specification	Location	Service
8.1-1	JC97-02187A	MEA UNIT-FRAME BASE;CLP-600,SEC,EXPORT,-	M0013	SNA
8.1-2	JC97-02151B	MEA UNIT-FRAME MAIN;CLP-650,SEC,EXPORT,-		SNA
8.1-3	JC63-00585A	COVER-_M_GEAR;CLP-600,HIPS,T2.0,W37.1,L9	C0031	SA
8.1-4	JC61-01002A	FRAME-P-FRONT;CLP-600,SECC,-,-,-,T1.0,W2	F0012	SNA
8.1-5	JC61-01012A	GUIDE-_M_BUSH HARNESS S;CLP-600,ABS,2.5,	G0039	SNA
8.1-6	JC61-01004A	FRAME-P-BOTTOM;CLP-600,SECC,-,-,-,T1.0,W	F0011	SNA
8.1-7	JC61-01046A	BRACKET-P-MPF;CLP-600,SECC,T1.2,W46.5,L2	B0015	SNA
8.1-8	JC61-00998A	BRACKET-P-SHIELD SMPS;CLP-600,SECC,T1.0,	B0018	SNA
8.1-9	JC44-00100A	SMPS-PSP_TYPE5_V2C;SCX-4521F,*,AC/DC,-,2	S0014	SA
8.1-11	JC96-03986A	ELA UNIT-SMPS PDL V2;CLP-650,SEC,EXPORT,		SA
8.1-12	JC61-01018A	HOUSING-_M_MIDDLE PART;CLP-600,HIPS,HB,2	H0023	SA
8.1-13	JC39-00418A	CBF HARNESS-MAIN_SMPS;CLP-600,CBF HARNES	C0017	SA
8.1-14	JC44-00098A	HVPS-DAVINCI;-,24V,21.6V~27.6V,-,MAX 5KV	H0027	SA
8.1-16	JC59-00022A	UNIT-LSU DAVINCI;CLP-600,-,-,COLOR 16PPM	U0001	SA
8.1-18	JC96-03437A	ELA UNIT-DUCT LEFT;CLP-600,SEC,EXPORT,-,	E0012	SA
8.1-18-1	JC67-00072A	DUCT-_M_FUSER LOWER;CLP-600,ABS,V0,T2.0,	D0002	SNA
8.1-18-2	JC67-00073A	DUCT-_M_FUSER UPPER;CLP-600,ABS,V0,T2.0,	D0003	SNA
8.1-18-3	JC31-00012C	FAN-DC INVERTER;AD0624HS-A76GL(,SCX-6345		SA
8.1-18-4	JC72-01368A	SPONGE-DUCT;CLP-600,POLYESTERE FOAM,-,T2	S0017	SNA
8.1-19	JC61-01003A	FRAME-P-REAR;CLP-600,SECC,-,-,-,T1.0,W22	F0013	SNA
8.1-20	6502-001093	CABLE CLAMP;DAWS-3NE,ID11*L34.8,-,NYLON6	C0002	SA
8.1-21	JC92-01659A	PBA SUB-DRIVER;CLP-600,SEC,KOREA,DRIVER,	P0003	SA
8.1-22	JC39-00426A	CBF HARNESS-DRIVER;CLP-600,CBF HARNESS,U	C0010	SA
8.1-23	JC61-00991A	BRACKET-P-CONT LOWER;CLP-600,SECC,T0.8,W	B0006	SA
8.1-27	JC97-02400A	MEA UNIT-BRKT CONN;CLP-600,SEC,EXPORT,-,	M0007	SA
8.1-27-1	JC70-10234A	IPR-SHIELD SIMM;ML-80,SECC,-,T0.5,-,-,-,	I0004	SA
8.1-27-2	JC61-00992A	BRACKET-P-CONT UPPER;CLP-600,SECC,T0.5,W	B0007	SNA
8.1-28	JC96-03369A	ELA UNIT-DRIVE MAIN;CLP-600,SEC,EXPORT,-	E0011	SA
8.1-29	JC96-04304A	ELA UNIT-FUSER;CLP-650,SEC,EXPORT,-,-,-,		SA
8.1-29	JC96-04304A	ELA UNIT-FUSER IH SOMO;CLP-650,-,EXPORT,		SA
8.1-30	JC96-03441E	ELA UNIT-DEVE BK_SET;CLP-650,SEC,EXPORT,		SNA
8.1-31	JC96-03443E	ELA UNIT-DEVE C_SET;CLP-650,SEC,EXPORT,S		SNA
8.1-32	JC96-03445E	ELA UNIT-DEVE M_SET;CLP-650,SEC,EXPORT,S		SNA
8.1-33	JC96-03447E	ELA UNIT-DEVE Y_SET;CLP-650,SEC,EXPORT,S		SNA
8.1-34	JC96-03449A	ELA UNIT-PTB SET;CLP-600,SEC,XAA,PTB,SET	E0019	SNA
8.1-35	JC96-03490A	ELA HOU-COVER F LCD;CLP-600N,SEC,EXPORT,	E0002	SA
8.1-36	JC97-02190C	MEA HOU-COVER LEFT;CLP-650,SEC,EXPORT,-,		SA
8.1-36-2	JC64-00176A	HANDLE-_M_COVER LEFT;CLP-600,HIPS,2.5,28	H0001	SA
8.1-37	JC97-02194A	MEA HOU-COVER TOP;CLP-600,SEC,EXPORT,-,-	M0006	SA
8.1-38	JC97-02242A	MEA HOU-COVER REAR;CLP-600,SEC,EXPORT,-,	M0002	SA
8.1-38-1	JC63-00575A	COVER-_M_REAR;CLP-600,HIPS,2.5,464.9,437	C0036	SNA
8.1-38-2	JC63-00192B	COVER-M MAIN REAR DUMMY;CLP-600,HIPS,-,W	C0043	SA
8.1-39	JC97-02191A	MEA HOU-COVER RIGHT;CLP-600,SEC,EXPORT,-	M0004	SA
8.1-40	JC97-02192A	MEA UNIT-CASSETTE;CLP-600,SEC,EXPORT,-,-	M0009	SA
8.1-42	6043-001097	PIN-SPRING;W,D2,L14,-,SUS304 CSP 1/2H,T0	P0015	SNA
8.1-43	JC66-00472A	GEAR-FUSER DRIVE 2_Z30;CLP-500,POM,DEL 5	G0026	SA
8.1-46	JC96-03933A	ELA UNIT-DUCT SMPS;CLP-600,SEC,EXPORT,-,		SA
8.1-46-1	JC67-00161A	DUCT-FAN SMPS;CLP-600,PC+ABS,T2.0,W51.4,		SNA
8.1-48	JC96-03984A	ELA UNIT-IH BOARD V2;CLP-650,SEC,EXPORT,		SA
8.2-1	JC63-00581A	COVER-_M_DECO;CLP-600,HIPS,2.5,462.0,350	C0025	SA
8.2-2	JC63-00582A	COVER-_M_FRONT;CLP-600,ABS,3.0,429.0,221	C0030	SA
8.2-5	JC72-01199B	PMO-OPE KEY 2;CLP-510,ABS,36024,-,-,HB,-	P0047	SA
8.2-6	JC72-01200A	PMO-OPE KEY 2 CAP;CLP-500,PMMA,MILKY WHI	P0046	SA

SA : SERVICE AVAILABLE SNA : SERVICE not AVAILABLE DNA : DELIVERY not AVAILABLE

Drawer#	SEC-Code	Description & Specification	Location	Service
8.2-7	JC72-01197C	PMO-M OPE KEY 1;CLP-600,ABS,SOLITARY BLU	P0045	SA
8.2-3	JC63-00613A	COVER-_M_OP FRAME LCD;CLP-600,HIPS,T2.5,	C0035	SA
8.2-4	JC63-00642D	SHEET-COVER OP LCD;CLP-650,PC SHEET,T0.5		SA
8.2-8	JC72-01198C	PMO-M OPE KEY 1 CAP;CLP-600,ABS,SOLITARY	P0044	SA
8.2-9	JC92-01675A	PBA SUB-LCD_PANEL;CLP-600,SEC,KOREA,LCD_	P0005	SA
8.3-1	JC63-00574A	COVER-_M_TOP;CLP-600,HIPS,2.5,386.7,465.	C0041	SNA
8.3-2	JC63-00588A	COVER-_M_STACKER;CLP-600,ABS,T2.5,W119.5	C0040	SA
8.3-3	JC63-00590A	COVER-_M_VENT;CLP-600,HIPS,T2.5,W215.0,L	C0042	SNA
8.3-4	JC63-00578A	COVER-_M_EXIT;CLP-600,HIPS,2.5,370.0,198	C0029	SNA
8.3-5	JC63-00579A	COVER-_M_AIR DUCT;CLP-600,PC+GF20%,2.5,3	C0024	SA
8.3-6	JC63-00580A	COVER-_M_ACTUATOR SENSOR;CLP-600,HIPS,2.	C0023	SNA
8.3-7	JC66-00798A	LEVER-_M_ACTUATOR SENSOR;CLP-600,POM,T2.	L0011	SA
8.3-8	JC61-00047A	SPRING ETC-TR L HAWK;ML-6060A,SWP-B,-,-,	O1030	SA
8.4-1	JC63-00589A	COVER-_M_RIGHT;CLP-600,HIPS,T2.5,W370.0,	C0037	SA
8.4-2	JC97-02405A	MEA UNIT-COVER MPF;CLP-600,SEC,EXPORT,-,	M0010	SA
8.4-2-1	JC63-00584A	COVER-_M_MP;CLP-600,HIPS,T2.5,257.4,L160	C0034	SNA
8.4-2-2	JC63-00586A	COVER-_M_INNER MP;CLP-600,HIPS,T2.0,W252	C0033	SNA
8.4-2-3	JC61-01043A	GUIDE-_M_SIDE MP L;CLP-600,HIPS,-,W131.9	G0049	SNA
8.4-2-4	JC61-01042A	GUIDE-_M_SIDE MP R;CLP-600,HIPS,T1.5,W13	G0050	SNA
8.4-2-5	JC72-00778B	PMO-TRAY EXIT MP;CLP-500,HIPS,LIGHT GRAY	P0050	SA
8.4-2-6	JG66-40003A	GEAR-PINION;SF4000,POM,WHT,M1,Z16	O1127	SA
8.4-2-7	JC63-00587A	TRAY-_M_LINK MP L;CLP-600,HIPS,T3.0,W55.	T0003	SA
8.4-2-8	JC68-01528A	LABEL(R)-HEIGHT MP;COMMON,KOREA,PC,T0.7,	L0005	SNA
8.4-3	JC64-00179A	HANDLE-_M_COVER R;CLP-600,HIPS,T2.5,W98.	H0002	SNA
8.4-4	JC61-01050A	BRACKET-P-COVER LOCK;CLP-600,SECC,T1.2,W	B0008	SNA
8.4-5	6107-001206	SPRING-TS;SUS304-WPB,BLACK,PI1.5,D10,L5,	S0043	SNA
8.4-6	JC61-01057A	HOLDER-_M_UPPER R;CLP-600,HIPS,HB,T2.5,W	H0018	SNA
8.4-7	6107-001194	SPRING-CS;SWP-B,BLK,PI0.9,D6.95,L20,-,-,	S0032	SA
8.4-7	6107-001247	SPRING-CS;STS304-WPB,-,PI1,D8,L44,-,-,ID	S0034	SNA
8.4-7	6107-001172	SPRING-CS;SUS304,-,PI0.5,D6.7,L17.5,-,-,	S0035	SA
8.4-8	JC61-01053A	GUIDE-_M_SUPPORTER UPPER;CLP-600,HIPS,HB	G0052	SNA
8.4-9	JC72-01082A	PMO-COVER DUP LOCKER R;CLP-500,POM,WHITE	P0037	SA
8.4-10	JC64-00178A	LOCKER-_M_PTB REAR;CLP-600,POM,WHT,HB,-,	L0017	SA
8.4-11	JC61-01058A	HOLDER-_M_UPPER F;CLP-600,HIPS,HB,T2.5,W	H0017	SNA
8.4-12	JC72-01081A	PMO-COVER DUP LOCKER F;CLP-500,POM,WHITE	P0036	SA
8.4-13	JC64-00177A	LOCKER-_M_PTB FRONT;CLP-600,PC+ABS,87182	L0016	SA
8.4-14	JC61-01051A	BRACKET-P-PTB LOCK;CLP-600,SECC,T1.2,W29	B0017	SNA
8.4-15	JC61-01055A	HOLDER-_M_LOWER R;CLP-600,HIPS,HB,T2.5,W	H0013	SNA
8.4-16	JC61-01052A	GUIDE-_M_SUPPORTER LOWER;CLP-600,HIPS,HB	G0051	SNA
8.4-17	JC61-01125A	HOLDER-_M_LINK;CLP-600,HIPS,HB,T2.5,W19.	H0011	SNA
8.4-18	JC66-00777A	LINK-_M_REAR 2;CLP-600,POM,L135.0,T4.5,-	L0014	SA
8.4-19	JC66-00835A	SHAFT-HINGE LINK;CLP-600,SUM24L,L14.5,¥ÕS	S0005	SNA
8.4-20	JC61-01056A	HOLDER-_M_LOWER F;CLP-600,HIPS,HB,T2.5,2	H0012	SNA
8.4-21	JC66-00778A	LINK-_M_FRONT;CLP-600,POM,L185.3,T3.7,-,	L0012	SA
8.5-1	JC61-01005A	FRAME-_M_BASE BOTTOM;CLP-600,HIPS,HR-136	F0004	SA
8.5-2	JC70-00390A	IPR-CHANNEL FRAME BASE;CLP-500,SECC,-,T1	I0003	SA
8.5-3	JC63-00207A	COVER-M-BASE BAR;CLP-500,HIPS,-,-,-,HB,-	C0044	SA
8.5-4	JC70-00379A	IPR-BRKT BASE BAR;CLP-500,SECC,-,T1.6,-,	I0002	SA
8.5-5	JC97-02149A	MEA UNIT-PICK UP;CLP-600,SEC,EXPORT,-,-,	M0019	SA
8.5-6	JC61-00685A	HOUSING-M-PICK UP MP;ML-2150,PC+ABS,-,-,	H0025	SA
8.5-7	JC66-00050A	CAM-CATCH;ML-9400W,POM,-,34¡¿18¡¿7,WHITE S	C0004	SA
8.5-8	JC96-03332A	ELA UNIT-MPF;CLP-600,SEC,EXPORT,-,-,-,-	E0018	SA
8.5-9	JC61-01147A	GUIDE-_M_PAPER MP;CLP-600,HIPS,T3.0,W234	G0043	SNA
8.5-10	JC61-40001A	FOOT-ML80;ML-80,NBR,-,GRAY,-,-,-	F0003	SA
8.5-11	JC63-00175A	COVER-SCREW LOCKING MP;CLP-500,POM,-,-,-	C0050	SA
8.5-12	JC61-01016A	PLATE-P-GROUND SCF MAIN;CLP-600,SUS304,T	P0026	SNA
8.5-13	JC39-00433A	CBF HARNESS-THER;CLP-600,CBF HARNESS,UL1	C0021	SA

SA : SERVICE AVAILABLE SNA : SERVICE not AVAILABLE DNA : DELIVERY not AVAILABLE

Drawer#	SEC-Code	Description & Specification	Location	Service
8.5-14	JC92-01660A	PBA SUB-TEMP_SENSOR;CLP-600,SEC,KOREA,TE	P0010	SA
8.5-15	JC61-00999A	BRACKET-P-POWER;CLP-600,SECC,T1.2,W41.5,	B0016	SNA
8.5-16	JC39-00452A	CBF HARNESS-AC_INLET;CLP-600,CBF HARNESS	C0008	SA
8.6-1	JC61-01001A	FRAME-_M_MAIN;CLP-600,ABS+GF20%,VB-4921,	F0007	SNA
8.6-2	JC63-00577A	COVER-_M_EXIT GUIDE;CLP-600,ABS,HB,2.5,2	C0027	SA
8.6-3	JC96-03772B	ELA UNIT-HOLDER AC;CLP-650,SEC,EXPORT,-,		SA
8.6-4	JC39-00424A	CBF HARNESS-EXIT;CLP-600,CBF HARNESS,UL1	C0011	SA
8.6-5	JC61-01007A	GUIDE-_M_RAIL FRONT;CLP-600,PC+ABS,V0,-,	G0045	SA
8.6-6	JC61-01006A	GUIDE-_M_RAIL REAR;CLP-600,PC+ABS, V0,-,	G0046	SA
8.6-7	JC92-01789A	PBA SUB-TEMP;CLP-600,SED,KOREA,-,-,-,-,-		SNA
8.6-8	JC96-03771A	ELA UNIT-BRKT DRAW;CLP-600,SEC,EXPORT,-,	E0004	SA
8.6-9	JC68-01503A	LABEL(R)-BK;COMMON,-,ART,100g/cm2,W15.0,	L0002	SNA
8.6-10	JC68-01504A	LABEL(R)-C;COMMON,-,ART,100g/cm2,W15.0,L	L0003	SNA
8.6-11	JC68-01505A	LABEL(R)-M;COMMON,-,ART,100g/cm2,W15.0,L	L0007	SNA
8.6-12	JC68-01506A	LABEL(R)-Y;COMMON,-,ART,100g/cm2,W15.0,L	L0008	SNA
8.6-13	JC66-00776A	LINK-_M_REAR 1;CLP-600,POM,L112.4,T4.5,-	L0013	SA
8.6-14	JC96-03366A	ELA UNIT-DEVE CRUM;CLP-600,SEC,EXPORT,-,	E0007	SNA
8.6-14-1	JC92-01671A	PBA SUB-DEVE_CRUM_IF;CLP-600,SEC,KOREA,D	P0002	SA
8.6-14-2	JC63-00571A	COVER-_M_DEVE CRUM BD;CLP-600,HIPS,2.0,1	C0026	SA
8.6-15	JC97-02402A	MEA UNIT-PTB TERMINAL;CLP-600,SEC,EXPORT	M0020	SA
8.6-15-1	JC61-01011A	GUIDE-_M_PTB TERMINAL;CLP-600,ABS,2.0,23	G0044	SA
8.6-15-2	JC70-00508A	ELECTRODE-HV F;CLP-600,SUS304WPB,¥Ó5,L32	E0026	SA
8.6-15-3	JC61-01010A	GUIDE-_M_TERMINAL CH;CLP-600,ABS,2.0,15.	G0053	SA
8.6-15-4	JC97-01401A	MEA UNIT-TERMINAL:TR;ML-5000A,SAMSUNG,KO		SA
8.6-15-6	JC70-00513A	ELECTRODE-HV E;CLP-600,SUS304WPB,¥Ó5,L32	E0025	SA
8.6-16	JC61-01264A	SPRING ETC-OPC F;CLP-600,SUS304 ,1.5,6.5	S0026	SA
8.6-17	JC97-02403A	MEA UNIT-DEV TERMINAL;CLP-600,SEC,EXPORT	M0011	SA
8.6-17-1	JC61-01008A	GUIDE-_M_TERMINAL UPPER;CLP-600,ABS,2.0,	G0055	SA
8.6-17-2	JC70-00505A	ELECTRODE-HV C;CLP-600,SUS304 WPB DU NI-	E0023	SA
8.6-17-3	JC70-00504A	ELECTRODE-HV B;CLP-600,SUS304 WPB DU NI-	E0022	SA
8.6-17-4	JC70-00503A	ELECTRODE-HV A;CLP-600,SUS304 WPB DU NI-	E0021	SA
8.6-17-5	JC61-01009A	GUIDE-_M_TERMINAL LOWER;CLP-600,ABS,2.0,	G0054	SA
8.6-18	JC61-01019A	HOLDER-_M_PTB LOCKER;CLP-600,POM,3.0,-,3	H0015	SNA
8.6-19	JC61-01265A	SPRING ETC-PTB F;CLP-600,SUS304 ,1.5,6.5	S0029	SA
8.6-20	JC61-01266A	SPRING ETC-PTB R;CLP-600,SUS304 ,1.5,6.5	S0030	SA
8.6-21	JC70-00506A	ELECTRODE-HV D;CLP-600,SUS304WPB,¥Ó10.0,	E0024	SA
8.6-22	JC39-00509A	CBF HARNESS-GND ZENER;SCX-4521F,-,UL1007		SA
8.6-23	JC96-04239A	ELA UNIT-DUCT REAR;CLP-600,SEC,EXPORT,-,	E0013	SA
8.6-23-1	JC61-01061A	HOLDER-_M_SWITCH;CLP-600,HIPS,HB,T2.0,W3	H0016	SA
8.6-23-2	JC61-00707A	PLATE-S/W DUPLEX;CLP-500,SUS304 1/2H,T0.	P0028	SA
8.6-23-3	JC39-00454A	CBF HARNESS-SWITCH;CLP-600,CBF HARNESS,U	C0020	SA
8.6-23-4	JC67-00074A	DUCT-_M_FUSER FAN;CLP-600,HIPS,HB,T2.0,W	D0001	SA
8.6-24	JC61-01077A	HOUSING-_M_SENSOR EXIT;CLP-600,HIPS,HB,T	H0024	SNA
8.6-25	0604-001264	PHOTO-INTERRUPTER;TR,-,-,REFLECTIVE,-		SA
8.6-25	0604-001154	PHOTO-INTERRUPTER;TR,0.2-1.0MA,80MW,DIP,	P0012	SA
8.6-26	JC39-00428A	CBF HARNESS-MP_1;CLP-600,CBF HARNESS,UL1	C0018	SA
8.6-27	JC61-01020A	PLATE-P-GROUND FUSER;CLP-600,SUS304,T0.2	P0023	SNA
8.6-28	JC39-00302A	CBF HARNESS-100M_GND;CLP-500,-,-,1 PIN,5	C0007	SA
8.6-29	JC61-01267A	SPRING ETC-OPC R;CLP-600,SUS304 ,1.5,6.5	S0027	SA
8.6-30	JC61-01014A	PLATE-P-GROUND OPC;CLP-600,SECC,T0.5,W15	P0024	SNA
8.6-31	JC61-01015A	PLATE-P-GROUND DRIVE;CLP-600,SUS304,T0.2	P0022	SNA
8.7-30	JC66-01200A	LEVER-M-RELEASE;CLP-600,PC,-,W36.0,L20.0		SA
8.7-31	JC61-01638A	BRACKET-P-RELEASE LEVER;CLP-600,SECC,T1.		SNA
8.7-41	JC39-00561A	CBF HARNESS-FUSER3;CLP-600,CBF HARNESS,U		SA
8.7-44	JC96-03655A	ELA UNIT-CARBON&SP;ML-3560,SEC,USA,BRUSH	K3054	SA
8.7-45	JC66-01231A	ROLLER-DUMMY;CLP-600,PFA,OD6.0,L10.0,-,-		SNA
8.7-46	JC61-01685A	SPRING ETC-DUMMY;CLP-600,SUS,0.5,-,-,20.		SA

ITSELL.eu

SA : SERVICE AVAILABLE SNA : SERVICE not AVAILABLE DNA : DELIVERY not AVAILABLE

Drawer#	SEC-Code	Description & Specification	Location	Service
8.7-50	JC97-02617A	MEA UNIT-PR;CLP-600,SEC,EXPORT,-,-,-,-		SA
8.7-54	JC61-01639A	BUSH-M-RELEASE LEVER;CLP-600,PET GF 30%,		SA
8.7-55	JC68-01134A	LABEL(P)-BLANK(FUSER);ML-1710D3,-,WHITE		SNA
8.7-56	6003-000196	SCREW-TAPTITE;PWH,+,B,M3,L10,NI PLT,SWRC	Z4397	SA
8.7-56	6002-000308	SCREW-TAPTITE;PH,+,B,M2.6,L6,ZPC(YEL),SW	-	SA
8.7-56	6003-000261	SCREW-TAPTITE;BH,+,B,M3,L6,ZPC(YEL),SWRC		SNA
8.7-56	6003-001086	SCREW-TAPTITE;BH,+,-,B,M3,L12,ZPC(BLK),S	-	SA
8.7-56	6003-000264	SCREW-TAPTITE;PWH,+,-,B,M3,L6,ZPC(YEL),S		SNA
8.7-56	6003-000269	SCREW-TAPTITE;BH,+,-,S,M3,L6,ZPC(YEL),SW		SA
8.7-56	6003-001256	SCREW-TAPTITE;BH,+,B,M4,L10,NI PLT,SWRCH		SNA
8.7-57	6003-000282	SCREW-TAPTITE;BH,+,-,B,M3,L8,ZPC(BLK),SW		SA
8.7-58	JC61-01637A	BRACKET-P-GUIDE LEVER R;CLP-600,SECC,T1.		SNA
8.7-59	JC61-01636A	BRACKET-P-GUIDE LEVER L;CLP-600,SECC,T1.		SNA
8.7-2	JC61-01069A	BRACKET-P-GUIDE FRAME;CLP-600,SECC,T0.8,	B0010	SNA
8.7-3	JC61-01126A	HOLDER-_M_FUSER GEAR;CLP-600,PPS+PTEE+GF	H0007	SNA
8.7-5	JC63-00648A	GROUND-P-FUSER BALL;CLP-600,SUS304,T0.3,	G0038	SNA
8.7-6	JC63-00593A	COVER-_M_SIDE R;CLP-600,PET GF30%,T2.5,W	C0039	SNA
8.7-7	JC66-00781A	GEAR-_M_EXIT IDLE;CLP-600,PBT,M1.0,Z22,-	G0004	SA
8.7-8	JC61-01070A	BRACKET-P-IDLE GEAR;CLP-600,SECC,T1.0,W3	B0012	SNA
8.7-9	JC66-00784A	LEVER-_M_ACTUATOR EXIT;CLP-600,PET GF30%	L0010	SA
8.7-10	JC66-00782A	GEAR-_M_EXIT;CLP-600,POM,M1.0,Z14,-,WHT,	G0005	SA
8.7-11	JC61-01064A	GUIDE-_M_DUPLEX;CLP-600,PET+GF30%,5V,T2.	G0040	SNA
8.7-12	JC66-00608A	ROLLER-EXIT IDLE;CLP-500,TEFLON,PI10.5,L	R0008	SNA
8.7-13	JC64-00186A	HANDLE-M-FIX FUSER;CLP-600,PC+SUM,-,-,L4	H0003	SA
8.7-14	JC72-20901A	PEX-ROLLER EXIT F_UP;ML-5000A,TEFLON,WHI	P0011	SA
8.7-15	JC61-01271A	SPRING ETC-ACTUATOR;CLP-600,SUS304 ,0.35	S0018	SA
8.7-16	JC96-03966A	ELA UNIT-HEAT ROLLER;CLP-650,SEC,EXPORT,		SA
8.7-17	JC67-00163A	CAP-THERMISTOR;CLP-600,PET+GF30%,T1.5,W1		SNA
8.7-18	JC61-70911A	SPRING ETC-EXIT ROLL FD;ML-165,SUS304 WP	O1053	SA
8.7-19	JC63-00594A	COVER-_M_EXIT ROLLER;CLP-600,PET GF30%,T	C0028	SNA
8.7-20	JC72-41007A	PMO-ROLLER FD F;ML-165,POM,BLACK,-,-,-,-	P0048	SA
8.7-21	JC66-01233A	ROLLER-FD R;CLP-600,PFA,OD12.0,L26.0,-,-		SNA
8.7-22	JC61-00547A	HOLDER-EXIT(MC);SCX-5312F,PC,-,-,-,WHITE	H0019	SNA
8.7-23	JC61-01065A	GUIDE-_M_OUTPUT;CLP-600,PET+GF30%,5V,T2.	G0042	SNA
8.7-24	JC63-00592A	COVER-_M_SIDE L;CLP-600,PET GF30%,T2.5,W	C0038	SNA
8.7-25	JC61-01062A	FRAME-_M_UPPER FUSER;CLP-600,PET+GF30%,B	F0008	SNA
8.7-27	JC61-01063A	FRAME-_M_LOWER FUSER;CLP-600,PET+GF30%,B	F0006	SNA
8.7-28	JC63-00644A	COVER-M-FRAME FUSER;CLP-600,PC,T3,W309.0	C0047	SNA
8.7-29	JC68-01581A	LABEL(P)-CAUTION HOT;COMMON,SAMSUNG,PET,		SNA
8.7-32	JC63-00643A	COVER-M-CARBON BRUSH;CLP-600,PET GF 30%,	C0045	SNA
8.7-34	JC39-00444A	CBF HARNESS-FUSER2;CLP-600,CBF HARNESS,U	C0013	SA
8.7-35	JC66-00783A	ROLLER-EXIT;CLP-600,SUM24L+EPDM,¥Ó6.0+¥ÓSN	R0009	SNA
8.7-36	1404-001359	THERMISTOR-NTC ASSY;1KOHM,-,4537K,0.25MW	T0001	SA
8.7-37	JC70-00489A	ELECTRODE-P-TERMINAL R;CLP-600,C5210P,T0	E0028	SA
8.7-38	JC70-00488A	ELECTRODE-P-TERMINAL L;CLP-600,C5210P,T0	E0027	SA
8.7-39	4712-001027	THERMOSTAT;125/250VAC,15/7.5A,170+-5C,0C	T0002	SA
8.7-40	JC39-00506A	CBF HARNESS-FUSER1;CLP-600,CBF HARNESS,U	C0012	SA
8.7-42	JC61-00423A	BUSH-6_D;ML-9400W,BEARING OIL,-,-,-,NTR,	B0025	SA
8.7-47	JC75-00095A	MEC-BRUSH ANTISTATIC;ML-6060A,SEC,NTR	M0022	SA
8.7-48	JC63-00837A	GROUND-P-COVER EXIT;CLP-600,SUS304,T0.2,	G0036	SA
8.7-49	JC63-00647A	GROUND-P-FUSER B;CLP-600,SUS304,T0.3,W17	G0037	SNA
8.7-51	JC61-01066A	GUIDE-_M_INPUT;CLP-600,PET+GF30%,5V,T3.0	G0041	SNA
8.7-52	JC61-01176A	HOLDER-M-SPRING PR;CLP-600,PET+GF30%,-,W	H0022	SNA
8.7-53	6107-001248	SPRING-CS;SWP-B,-,PI1.3,D6.8,L19.5,-,-,I	S0040	SNA
8.8-1	JC61-00996A	BRACKET-P-MAIN FRONT;CLP-600,SECC,T1.2,W	B0013	SNA
8.8-2	JC66-00749A	GEAR-_M_IDLE_Z41;CLP-600,POM,M0.6,Z41,-,	G0011	SA
8.8-3	JC66-00750A	GEAR-_M_IDLE_Z43;CLP-600,POM,M0.6,Z43,-,	G0012	SA

ITT-Service.eu

SA : SERVICE AVAILABLE SNA : SERVICE not AVAILABLE DNA : DELIVERY not AVAILABLE

Drawer#	SEC-Code	Description & Specification	Location	Service
8.8-4	JC66-00755A	LINK-P-ITB;CLP-600,SECC,L36.22,T1.6,¥Ó6.S	L0015	SNA
8.8-5	JC66-00753A	GEAR-_M_IDLE_Z79;CLP-600,POM,M0.6,Z79,-,	G0013	SA
8.8-6	JC66-00751A	GEAR-_M_RDCN FU_Z52/Z22;CLP-600,POM,M0.8	G0021	SA
8.8-7	JC66-00466A	GEAR-DEVE IDLE_Z41;CLP-500,POM,DE8903,M0	G0022	SA
8.8-8	JC66-00473A	GEAR-IDLE Z51;CLP-500,POM,DE8903,M0.8,Z5	G0027	SA
8.8-9	JC66-00468A	GEAR-DEVE RDCN;CLP-500,POM,M90-44,M0.5/M	G0023	SA
8.8-10	JC66-00831A	SHAFT-FUSER DRIVE;CLP-600,SUM24L,L77.5,-	S0004	SNA
8.8-11	6031-000022	WASHER-PLAIN;-,ID5.9,OD10.0,T0.13,BLK,PO		SNA
8.8-11	6031-000023	WASHER-PLAIN;-,ID5.9,OD10.0,T0.5,BLK,POL		SNA
8.8-11	6031-001051	WASHER-PLAIN;M4,ID4.1,OD7.0,T0.13,*,POLY		SNA
8.8-11	6031-001490	WASHER-PLAIN;POLYMIDE,-,ID7.1,OD14,T0.13		SNA
8.8-11	6031-001534	WASHER-PLAIN;POLY,M6,ID6.1,OD8.3,T0.13,B		SNA
8.8-12	JC66-01197A	SHAFT-DEVE K CLUTCH;CLP-600,SUM24L,L75.6		SNA
8.8-13	JC47-00006C	MEP-CLUTCH SPRING;-,CLP-600,4.0W,DC24V,0		SNA
8.8-14	JC66-00834A	SHAFT-DEVE DRV KMCY;CLP-600,SUM24L,L72.1	S0002	SNA
8.8-15	JC66-00833A	SHAFT-FEED DRIVE;CLP-600,SUM24L,L50.5,-,	S0003	SNA
8.8-16	JC66-00754A	GEAR-_M_RDCN FEED1_Z69;CLP-600,POM,M0.6,	G0020	SA
8.8-21	JC61-00997A	BRACKET-P-MAIN REAR;CLP-600,SECC,T1.2,W1	B0014	SNA
8.8-22	JC31-00041A	MOTOR DC-DEVE DRIVE;50M843A152,CLP-600,2	M0024	SA
8.8-23	6043-001115	PIN-PARALLEL(KEY);A,OD2.0,L14.0,ZPC(YEL)	P0014	SNA
8.8-24	JC31-00037C	MOTOR STEP-FU, DRIVE;M55SP-2NK,CLP-600,1	M0025	SA
8.8-25	JC66-00470A	GEAR-FEED DRIVE_Z37;CLP-500,POM,DE8903,M	G0024	SA
8.8-26	JC66-00746A	GEAR-_M_OPC DRV2_Z21;CLP-600,POM,M0.8,Z2	G0017	SA
8.8-27	JC66-00746B	GEAR-M_DEVE DRV2_Z21;CLP-600,POM,M0.8,Z2		SA
8.8-28	6107-001214	SPRING-ES;SWP(PW-2),BLACK,PI0.45,D5.35,L	S0041	SA
8.8-28	6107-001269	SPRING-ES;SWPB,-,PI0.4,D2.4,L21.4,-,-,ID		SNA
8.8-31	JB70-00168A	ICT-PIN ADF;SCX-1110F,STS303,D2.0,-,-,-,	I0001	SA
8.8-32	6031-001255	WASHER-PLAIN;NYLON,CUTTING,ID5,OD9,T0.5,	W0004	SA
8.8-34	JC61-00426A	BUSH-8/5;ML-9400W,KAB-23,ID8.0,OD12.0,L6	B0026	SA
8.8-36	JC61-00699A	BUSH-D6/L4;CLP-500,BRONZE+ST,ID6.0,OD9.0	B0027	SA
8.8-38	6031-001002	WASHER-PLAIN;M17.5,ID6.1,OD17.5,T0.13,BL		SNA
8.8-35	6003-000301	SCREW-TAPTITE;BH,+,S,M4,L6,ZPC(YEL),SWRC		SNA
8.8-37	JF68-10532B	LABEL(P)-BAR CODE;CLP-500,-,YUPO PAPER,1		SNA
8.9-1	JC61-01041A	FRAME-_M_BASE MP;CLP-600,HIPS,HR1360T,HB	F0005	SNA
8.9-2	JC66-00764A	ROLLER-IDLE FEED;CLP-600,POM,OD13.0,ID3.	R0013	SA
8.9-3	JC61-01274A	SPRING ETC-ROLLER;CLP-600,SUS304-WPB,0.7	S0032	SA
8.9-4	JC61-00387A	SPRING ETC-PAD;ML-9400W,SUS304WPB,PI0.5,	S0028	SA
8.9-5	JC61-01044A	HOLDER-_M_PAD;CLP-600,PC+ABS,T3.0,W54.0,	H0014	SNA
8.9-6	JC73-00132A	RPR-FRICTION PAD MP;ML-2150,NBB,53*9.8*T	R0019	SA
8.9-7	JC66-00775A	LEVER-_M_ACTUATOR EMPTY;CLP-600,ABS,T3.0	L0009	SNA
8.9-8	JC72-00772A	PMO-HOLDER SENSOR,MP;SCX-5100,ABS,BLACK,	P0039	SA
8.9-9	JC92-01662A	PBA SUB-MP_EMP_SENSOR;CLP-600,SEC,KOREA,	P0006	SA
8.9-10	JC39-00431A	CBF HARNESS-MP_EMP2;CLP-600,CBF HARNESS,	C0019	SA
8.9-11	JC61-01060A	PLATE-P-GROUND BRACKET;CLP-600,SUS304,T0	P0021	SNA
8.9-12	JC72-00382B	PMO-BUSHING FEED;ML-1710,POM(DERLIN 8903	O1102	SA
8.9-13	JC66-00836A	ROLLER-FEED MPF;CLP-600,SUM24L+EPDM,¥Ó6/S	R0010	SNA
8.9-14	JC72-41191B	PMO-BEARING SHAFT;ML-2150,POM,BLK,-,DE89	P0032	SA
8.9-15	JC61-01145A	BUSH-_M_ROLLER FEED;CLP-600,AT-15CF,ID6.	B0022	SA
8.9-16	6107-001249	SPRING-CS;SUS304-WPB,-,PI0.5,D8.8,L6,-,-	S0038	SNA
8.9-17	JC61-01047A	BRACKET-P-GEAR TRAY;CLP-600,SECC,T1.2,W5	B0009	SNA
8.9-18	JC66-00771A	GEAR-_M_IDLE PICKUP;CLP-600,POM,M0.8,SPU	G0010	SA
8.9-20	JC66-00769A	GEAR-_M_MP FEED;CLP-600,POM,M0.8,SPUR,Z1	G0014	SA
8.9-21	JC61-01127A	HOLDER-_M_CLUTCH GEAR;CLP-600,POM,ID6.0,	H0005	SA
8.9-22	JC66-00770A	GEAR-_M_IDLE FEED;CLP-600,POM,M0.8,SPUR,	G0009	SA
8.9-23	JC66-00767A	GEAR-_M_DRIVE IDLE;CLP-600,POM,M0.8,SPUR	G0003	SA
8.9-24	JC33-00017A	SOLENOID-MP;DLH-34L080-08,CLP-600,24V,8O	S0016	SA
8.9-25	JC66-00772A	CAM-_M_PICK UP MP;CLP-600,PC,-,ID6.1,BLK	C0003	SNA

SA : SERVICE AVAILABLE SNA : SERVICE not AVAILABLE DNA : DELIVERY not AVAILABLE

Drawer#	SEC-Code	Description & Specification	Location	Service
8.9-26	JC61-00671A	HOLDER-M-BUSHING TX;ML-2150,POM,-,-,-,BL	H0020	SA
8.9-28	JC72-01003A	PMO-IDLE PICK UP MP;ML-2150,POM,WHITE,-,	P0042	SA
8.9-29	JC66-00453A	SHAFT-M-PICK UP MP;ML-2150,PC NH-1023,-,	S0006	SA
8.9-30	JC66-00768A	GEAR-_M_MP PICK UP;CLP-600,POM,M0.8,SPUR	G0015	SA
8.9-31	JC61-00003A	SPRING ETC--CAM MP;ML-6100,SUS304-WPB,0.	S0020	SA
8.9-32	JC66-00766A	GEAR-_M_HOLDER CAM;CLP-600,POM,M0.8,SPUR	G0008	SA
8.9-33	JC66-10202A	BEARING-PICK UP;ML-80,POM,-,-,-	B0003	SA
8.9-34	JC61-01045A	BRACKET-P-HODLER PICKUP;CLP-600,SECC,T1.	B0011	SNA
8.9-35	JC61-01048A	PLATE-_M_KNOCK UP;CLP-600,ABS+GF 20%,T2.	P0016	SNA
8.9-36	JC73-00141A	RPR-PAD CASSETTE;ML-1510,URETHANE SPONGE	R0020	SA
8.9-37	JC61-70913A	SPRING ETC-KNOCK UP MP;ML-2150,SUS304 WP	S0024	SA
8.9-38	JC72-01004A	PMO-IDLE KNOCK UP MP;ML-2150,POM,BLK,-,M	P0041	SA
8.10-1	JC63-00573A	COVER-M-REGI FRAME;CLP-600,HIPS,1.5,253.	C0049	SNA
8.10-2	JC61-01023A	FRAME-P-REGI;CLP-600,SECC,-,-,-,T1.2,250	F0014	SNA
8.10-3	JC61-01272A	SPRING ETC-BUSH REGI;CLP-600,SWP-B,0.4,-	S0019	SA
8.10-4	JC61-00669A	BUSH-M-ROLLER REGI U;ML-2150,POM(CE20),6	B0029	SA
8.10-6	JC72-00998A	PMO-ACTUATOR REGISHUTTER;ML-2150,ABS G/F	P0030	SA
8.10-7	JC66-00446A	SHAFT-REGI UPPER;ML-2150,SUM22,-,6,-,-,-	S0010	SA
8.10-8	JC67-00047A	CAP-M_BUSHING ACTUATOR;ML-2150,POM,-,-,-	C0006	SA
8.10-10	JC66-00648A	ROLLER-M_REGI IDLE S25;ML-2150,POM,11.9,	R0015	SA
8.10-11	JC66-00647A	ROLLER-M_REGI IDLE L25;ML-2150,POM,12.4,	R0014	SA
8.10-12	6107-001158	SPRING-TS;SUS304-WPB,-,PI0.4,D6.7,-,-,-	S0042	SA
8.10-13	JC61-01094A	HOLDER-M-SENSOR;CLP-600,POM M90-44,T2.5,		SNA
8.10-13	JC61-01040A	HOLDER-M-SENSOR;CLP-600,HIPS,2.0,23.0,32	H0021	SA
8.10-14	0604-001095	PHOTO-INTERRUPTER;TR,90%,150mW,DIP-4,BK	P0013	SA
8.10-15	JC66-00765A	ROLLER-REGI LOWER;CLP-600,SUM24L,OD13.75	R0017	SA
8.10-16	JC61-01146A	BUSH-_M_ROLLER REGI L;CLP-600,POM,ID6.0,	B0023	SA
8.10-17	JC61-01128A	HOLDER-_M_GEAR REGI;CLP-600,POM,T1.3,ID6	H0010	SA
8.10-19	JC66-00774A	GEAR-M-REGI;CLP-600,POM,M0.8,Z19,-,NTR,	G0033	SA
8.10-21	JC61-01039A	FRAME-M-PICK UP;CLP-600,PC+ABS,YGP 5001A	F0010	SNA
8.10-22	JC92-01661A	PBA SUB-FCF_EMP_SENSOR;CLP-600,SEC,KOREA	P0004	SA
8.10-23	JC61-01049A	PLATE-P-GROUND REGI;CLP-600,C5210P,T0.2,	P0025	SNA
8.10-26	JC72-00719A	PMO-ACTUATOR EMPTY;SCX-5100,-,ABS,BLK,HB	P0029	SA
8.10-28	JC61-70950A	SPRING ETC-EXTENSION;ML-5000A,-,-,-,-,-,	S0022	SA
8.10-29	JC61-01038A	HOUSING-M-PICK UP;CLP-600,PC+GF20%,OD5,-	H0026	SNA
8.10-30	JC73-00224A	RUBBER-PICK UP MP;ML-3560,IR,D29.8,35,27	C4024	SA
8.10-32	JC66-00758A	SHAFT-PICK UP;CLP-600,PC+GF20%,72.5,4.0,	S0009	SA
8.10-33	JC66-00761A	GEAR-M-PICK UP;CLP-600,POM,M0.8,SPUR,Z50	G0032	SA
8.10-34	JC61-01029A	GUIDE-P-GEAR BRACKET;CLP-600,SECC,T1.2,1	G0059	SA
8.10-35	JC66-00759A	GEAR-M-MAIN;CLP-600,POM,M0.8,SPUR,Z31,-,	G0028	SA
8.10-36	JC66-00763A	GEAR-M-PICK UP IDLE;CLP-600,POM,M0.8,SPU	G0031	SA
8.10-37	JC66-00762A	GEAR-M-PICK UP IDLE 2;CLP-600,POM,M0.8,S	G0030	SA
8.10-38	JC66-00760A	GEAR-M-MP IDLE;CLP-600,POM,M0.8,SPUR,Z20	G0029	SA
8.10-39	JC33-00012B	SOLENOID-MAIN;DLH-34L080-10,CLP-600,24V,	S0015	SNA
8.11-1	JC61-01013A	GUIDE-_M_SCT PAPER UPPER;CLP-600,HIPS,2.	G0048	SNA
8.11-2	JC66-00903A	ROLLER-SHAFT FEED;CLP-600,SUM24L+EPDM,¥ÕS	R0018	SNA
8.11-3	JC72-41364A	PMO-BUSHING_P/U,MP;ML-6100,POM,BLACK,-,C	P0035	SA
8.11-5	JC61-01021A	PLATE-P-GND FEED ROLLER;CLP-600,SUS304,T	P0020	SNA
8.11-9	JC66-00773A	GEAR-_M_FEED;CLP-600,POM,M0.8,Z27,-,NTL,	G0007	SA
8.11-11	JC61-01149A	GUIDE-_M_SCT PAPER LOWER;CLP-600,HIPS,HB	G0047	SNA
8.12-1	JC61-01022A	FRAME-M-CASSETTE;CLP-600,HIPS,HR-1360T,H	F0009	SNA
8.12-2	JC63-00572A	COVER-M-CASSETTE;CLP-600,ABS,3.0,429.6,1	C0046	SNA
8.12-3	JG61-70531A	SPRING ETC-LOCKER,PLATE;SF6000,STS304WPB	S0025	SA
8.12-4	JC72-01073A	PMO-LOCKER PLATE;CLP-500,POM,WHITE,-,M90	P0043	SA
8.12-5	JC61-01024A	GUIDE-M-FRONT CASSETTE;CLP-600,HIPS,HB,-	G0056	SNA
8.12-6	JC61-01037A	STOPPER-M-GUIDE SIDE;CLP-600,POM,OD12.0,	S0044	SA
8.12-7	JC61-01026A	GUIDE-M-REAR;CLP-600,HIPS,HB,3.0,128.0,4	G0057	SA

SA : SERVICE AVAILABLE SNA : SERVICE not AVAILABLE DNA : DELIVERY not AVAILABLE

Drawer#	SEC-Code	Description & Specification	Location	Service
8.12-8	JC68-01527A	LABEL(R)-CASSETTE;COMMON,KOREA,YUPO,T0.2	L0004	SNA
8.12-9	6107-001200	SPRING-CS;SUS304-WPB,-,PI0.85,D21.85,L55	S0039	SNA
8.12-10	JC61-01030A	PLATE-P-KNOCK UP;CLP-600,SECC,T1.0,206.2	P0027	SNA
8.12-11	JC61-01129A	PLATE-KNOCK UP PAD;CLP-600,URETHANE SPON	P0017	SNA
8.12-13	JC61-01027A	GUIDE-P-SIDE LEFT;CLP-600,SECC,T1.2,52.5	G0060	SNA
8.12-15	JC61-00653A	BUSH-M-FINGER,F;ML-2150,POM,-,-,-,BLK,-	B0028	SA
8.12-16	JC63-00609A	COVER-_M_GUIDE SIDE L;CLP-600,POM,T1.2,W	C0032	SNA
8.12-17	JC61-01025A	GUIDE-M-SIDE LOCK;CLP-600,ABS,HB,2.0,52.	G0058	SNA
8.12-18	JC61-01031A	PLATE-P-FINGER LEFT;CLP-600,SUS,T1.2,71.	P0018	SNA
8.12-19	JC61-01028A	GUIDE-P-SIDE RIGHT;CLP-600,SECC,T1.2,91.	G0061	SNA
8.12-20	JC61-01032A	PLATE-P-FINGER RIGHT;CLP-600,SUS,T1.2,71	P0019	SNA
Replacement	JC69-00814B	BOX(P)-MAIN (UK);CLP-650,A-1,599,630,560		SA
Replacement	3903-000042	CBF-POWER CORD;DT,EU,FP3/YES,IEC320 C13/	C0022	SA
#N/A	JC68-01518A	MANUAL-QIG;CLP-600,SEE,16 LANGUAGE,-,M15		SNA
#N/A	JC68-01518B	MANUAL-QRG;CLP-600,XSG,TURKEY,TURKEY,M-1		SNA
#N/A	JC96-03987A	ELA UNIT-MAIN LINEPDL;CLP-650,SEC,EXPORT		SNA
#N/A	JC96-04117A	ELA HOU-MAIN_SODIMM;CLP-650,SEC,KOREA,MA		SNA
#N/A	JC97-02211B	MEA UNIT-MAIN FRAME;CLP-650,SEC,EXPORT,-		SA
#N/A	JC99-01855A	PAA WOOD-PACKING;CLP-600,SAMSUNG,-,-,-,-		SNA
#N/A	JC99-01856B	PAA-LABEL_SEE;CLP-600/SEE,SEC,-,LABEL AS		SNA
#N/A	JC99-01955E	INA-ACCESSORY;CLP-650/SEE,SEC,-,DAVINCI,		SNA
#N/A	0201-001162	ADHESIVE-CYA;LOCTITE403,NTR,1250,20G		SNA
#N/A	0201-001183	ADHESIVE-AA;ARON ALPHA #202F,NTR,100,20G		SNA
#N/A	0201-001833	ADHESIVE-HM;30-NF,WHITE,200-600,-		SNA
#N/A	0203-001102	TAPE-OPP MASKING;OPP-2,T0.05,W100,L400M,		SNA
#N/A	0203-001159	TAPE-FILAMENT;#8915,T0.15,W12,L55000,CLR		SNA
#N/A	0203-001189	TAPE-ACETATE;#810,T0.05,W12,L65000,TRP,-		SNA
#N/A	0205-001003	GREASE-BEARING;NYOGEL788,DAMPING GREASE,		SNA
#N/A	0205-001059	GREASE-BEARING;PETAMO GHV 133,BEIGE,15KG		SNA
#N/A	0205-001080	GREASE-BEARING;NYOGEL 774H,NOISE DAMPING		SNA
#N/A	0205-001144	GREASE-BEARING;SF-112,HANARL,NOISE TAMPI		SNA
#N/A	6001-000568	SCREW-MACHINE;PH,+,M3,L8,NI PLT,SWRCH18A		SA
#N/A	6044-000001	RING-CS;ID3,OD3,T0.25,BLACK,SUS304		SNA
#N/A	6103-000101	SUPPORTER;DALS-10N,H10,NTR,NYLON66		SNA
#N/A	6902-000288	BAG PE;T0.05,W250,L450,TRP,8,2,-		SNA
#N/A	6902-000321	BAG PE;T0.015,W800,L1300,TRP,28,6,M-Type		SNA
#N/A	6902-000332	BAG CONDUCTIVE;T0.1,W250,L500,BLK,-,-,-		SNA
#N/A	6902-000390	BAG PE;T0.05,W500,L450,TRP,8,2,-		SA
#N/A	JB68-00916A	LABEL RATING-BLANK;SF-340,SEC,TETRON,0.0		SNA
#N/A	JC02-00048A	TONER-GRINDED BLACK;CLP-600,SAK-79JG-K1,		SNA
#N/A	JC02-00049A	TONER-GRINDED CYAN;CLP-600,SAC-79JI-K1,C		SNA
#N/A	JC02-00050A	TONER-GRINDED MAGENTA;CLP-600,SAM-79GZ-K		SNA
#N/A	JC02-00051A	TONER-GRINDED YELLOW;CLP-600,SAY-79GZ-K1		SNA
#N/A	JC31-00050A	FAN;AD0424HB-C56,CLP-600,PBT+GF,-,3PIN,N		SA
#N/A	JC39-00366A	CBF HARNESS-SCF GND;SCX-4920N,CBF,UL1007	H1231	SA
#N/A	JC39-00398A	CBF HARNESS-PANEL;CLP-600,WIRE HARNESS,U	H2133	SA
#N/A	JC39-00423A	CBF HARNESS-STEPMOTOR;CLP-600,CBF HARNES		SA
#N/A	JC39-00432A	CBF HARNESS-BLDC;CLP-600,CBF HARNESS,UL1		SA
#N/A	JC39-00510A	CBF HARNESS-BLDC_2;CLP-600,CBF HARNESS,U	C0009	SA
#N/A	JC39-00585A	HARNESS-IH SMPS;CLP-650,WIRE HARNESS,UL3		SA
#N/A	JC39-00586A	HARNESS-IH BRACK;CLP-650,WIRE HARNESS,UL		SA
#N/A	JC39-00587A	HARNESS-IH MAIN;CLP-650,WIRE HARNESS,UL1		SA
#N/A	JC44-00116A	INVERTER-V2;CLP-600,-,50~60HZ,AC220~240V		SNA
#N/A	JC46-00279A	S/W APPLICATION-CD;-,CLP-650,DRV,1.0,ENG		SNA
#N/A	JC60-00008A	FLANGE-M-OPC;CLP-600,PC,-,ID6,OD25.3,9.8		SNA
#N/A	JC60-00009A	SPACER-M-DR;CLP-600,RUBILLOY-K,-,ID6.0,O		SNA
#N/A	JC61-00025A	SPRING ETC-CS-CHARGE APOLLO;SF-5100,SUS		SNA

SA : SERVICE AVAILABLE SNA : SERVICE not AVAILABLE DNA : DELIVERY not AVAILABLE

Drawer#	SEC-Code	Description & Specification	Location	Service
#N/A	JC61-00772A	BUSH-DEV DR;CLP-500,BRONZE,ID7.0,OD9.4,L		SNA
#N/A	JC61-00993A	BRACKET-P-INT LOWER;CLP-600,SECC,T0.8,19		SNA
#N/A	JC61-00994A	BRACKET-P-INT UPPER;CLP-600,SECC,0.6T,14		SNA
#N/A	JC61-01090A	HOLDER-M-PAPER C,F;CLP-600,POM,-,W10.0,L		SNA
#N/A	JC61-01091A	HOLDER-M-PAPER C,R;CLP-600,POM,-,W9.0,L1		SNA
#N/A	JC61-01092A	HOLDER-M-TENSION;CLP-600,POM,-,W15,L17,B		SNA
#N/A	JC61-01093A	HOLDER-M-TRANSFER;CLP-600,POM,-,W21.2,L1		SNA
#N/A	JC61-01095A	HOLDER-M-DRAW;CLP-600,HIPS,T2.5,W33.6,L3		SNA
#N/A	JC61-01096A	GUIDE-M-BELT;CLP-600,POM,T2.0,W7.7,23.0,		SNA
#N/A	JC61-01097A	GUIDE-M-DRIVE;CLP-600,POM,T2.0,W6.4,11.1		SNA
#N/A	JC61-01098A	GUIDE-M-SAW,FIX;CLP-600,HIPS,T2.0,W17.2,		SNA
#N/A	JC61-01099A	FRAME-M-PTB;CLP-600,ABS+GF20,-,-,BLACK,T		SNA
#N/A	JC61-01100A	FRAME-M-DUMMY,F;CLP-600,ABS,-,-,BLACK,T2		SNA
#N/A	JC61-01101A	FRAME-M-DUMMY,R;CLP-600,ABS,-,-,BLACK,T2		SNA
#N/A	JC61-01102A	PLATE-P-SAW;CLP-600,SUS304 CSP 1/2H,T0.1		SNA
#N/A	JC61-01103A	PLATE-P-DUMMY,SAW;CLP-600,SUS 304 CSP 1/		SNA
#N/A	JC61-01104A	PLATE-P-TENSION;CLP-600,SUS 304 CSP 1/2H		SNA
#N/A	JC61-01105A	PLATE-P-GROUND,PTB;CLP-600,SUS 304 CSP 1		SNA
#N/A	JC61-01106A	PLATE-P-PAPER,C;CLP-600,SUS 304 CSP 1/2H		SNA
#N/A	JC61-01107A	PLATE-P-DUMMY,BK;CLP-600,SUS 304 CSP 1/2		SNA
#N/A	JC61-01108A	PLATE-P-HV,BK;CLP-600,SUS 304 CSP 1/2H,T		SNA
#N/A	JC61-01110A	HOLDER-M-CR,F;CLP-600,POM,T2,W8.5,L10.4,		SNA
#N/A	JC61-01113A	FRAME-M-DEV;CLP-600,ABS+GF5%,-,-,BLK,T2,		SNA
#N/A	JC61-01114A	HOUSING-M-OPC;CLP-600,ABS+GF5%,T2,W306,L		SNA
#N/A	JC61-01115A	PLATE-M-SIDE,F;CLP-600,PC,T2.5,W29.4,21.		SNA
#N/A	JC61-01116A	PLATE-M-SIDE,R;CLP-600,PC+GF20,T2.0,W62,		SNA
#N/A	JC61-01117A	PLATE-P-BIAS,DR;CLP-600,SUS 301CSP1/2H,T		SNA
#N/A	JC61-01118A	PLATE-P-BIAS,SR;CLP-600,SUS 301CSP1/2H,T		SNA
#N/A	JC61-01119A	PLATE-P-BIAS,CR;CLP-600,SUS301 CSP1/2H,T		SNA
#N/A	JC61-01124A	HOLDER-M-PADDLE;CLP-600,POM,T2.0,W38.2,L		SNA
#N/A	JC61-01678A	SPRING ETC-DEV_FRONT;CLP-600,SWP-B,0.65,		SA
#N/A	JC61-01754A	PLATE-SAW FUSER;CLP-600,SUS304-CSP 1/2H,		SA
#N/A	JC61-70932A	SPRING ETC-GUIDE DEVE;ML-5000A,-,D4.3,-,	Z4159	SA
#N/A	JC61-70935A	SPRING ETC-SEPERATE P/UP;ML-5000A,-,-,-,		SA
#N/A	JC61-70967A	SPRING ETC-TR R;ML-5000A,SUS304 WPB,D4.5		SA
#N/A	JC62-00140A	SEAL-BLADE SIDE_BK;CLP-500,PE FORM,GRAY,		SNA
#N/A	JC62-00161A	SEAL-BRKT PTB,F;CLP-600,URETHANE SM55,-,		SNA
#N/A	JC62-00162A	SEAL-BRKT PTB,R;CLP-600,URETHANE SM55,-,		SNA
#N/A	JC62-00163A	SEAL-WASTE BOTTOM;CLP-600,URETHANE SM55,		SNA
#N/A	JC62-00164A	SEAL-BLADE,PTB;CLP-600,URETHANE SM55,-,5		SNA
#N/A	JC62-00166A	SEAL-WASTE FILM;CLP-600,URETHANE FILM,-,		SNA
#N/A	JC62-00167A	SEAL-COVER,WASTE;CLP-600,SM FOAM,GRAY,T4		SNA
#N/A	JC62-00168A	SEAL-BRACKET_BLADE;CLP-600,URETHANE FOAM		SNA
#N/A	JC62-00169A	SEAL-SUPPLY;CLP-600,PORON LE-20,GRAY,5,1		SNA
#N/A	JC62-00170A	SEAL-PADDLE;CLP-600,PORON LE20,GRAY,5,7.		SNA
#N/A	JC62-00171A	SEAL-BRACKET,CLN;CLP-600,SM FOAM,GRAY,T4		SNA
#N/A	JC62-00172A	SEAL-BRKT CLN_LOWER_F;CLP-600,PE FOAM,GR		SNA
#N/A	JC62-00173A	SEAL-BLADE INNER,R;CLP-600,PE TAPE(110PJ		SNA
#N/A	JC62-00174A	SEAL-BLADE INNER,F;CLP-600,PE TAPE(110PJ		SNA
#N/A	JC62-00175A	SEAL-PADDLE,INNER;CLP-600,URETHANE FOAM,		SNA
#N/A	JC62-00176A	SEAL-OPC,F;CLP-600,FELT+PORON,BROWN,3,W1		SNA
#N/A	JC62-00177A	SEAL-OPC,R;CLP-600,FELT+PORON,BROWN,3,W1		SNA
#N/A	JC62-00178A	SEAL-CLEANING_C/R;CLP-600,FLOCKING(DOBIR		SNA
#N/A	JC62-00179A	SEAL-BLADE SIDE;CLP-600,PE FOAM,GRAY,T2,		SNA
#N/A	JC62-00180A	SEAL-DEV FELT_F;CLP-600,PORON+TEFRON FEL		SNA
#N/A	JC62-00238A	SEAL-MANUAL SHEET;CLP-600,PE FOAM,GRAY,1		SNA
#N/A	JC62-00239A	SEAL-FILM COVER DEVE;CLP-600,PET FILM,WH		SNA

SA : SERVICE AVAILABLE SNA : SERVICE not AVAILABLE DNA : DELIVERY not AVAILABLE

Drawer#	SEC-Code	Description & Specification	Location	Service
#N/A	JC62-00244A	SEAL-FILM,OPC;CLP-600,URETHANE FILM,NTR,		SNA
#N/A	JC62-00245A	SEAL-FILM,AGI_BELT;CLP-600,PET,NTR,T0.1,		SNA
#N/A	JC62-00246A	SEAL-FILM,REAR;CLP-600,PET FILM,NTR,T0.1		SNA
#N/A	JC62-00247A	SEAL-AGITATOR;CLP-600,PORON,GRAY,T5.0,OD		SNA
#N/A	JC62-00248A	SEAL-FILM COVER_TONER;CLP-600,PET FILM,C		SNA
#N/A	JC62-00264A	SEAL-BRKT_CLN_LOWER_R;CLP-600,PE FOAM,GR		SNA
#N/A	JC62-00265A	SEAL-DEV_FELT_R;CLP-600,PORON+TEFRON FEL		SNA
#N/A	JC62-00276A	INSULATION-INT PBA;CLP-600,PC SHEET,0.43		SNA
#N/A	JC62-00277A	INSULATION-SMPS;CLP-600,PC SHEET,0.43,W2		SNA
#N/A	JC62-00322A	INSULATION-HEATSINK;CLP-650,PC SHEET,0.4		SNA
#N/A	JC62-00325A	SEAL-SIDE DR;CLP-600,PET,CLEAR,T0.1,ID6.		SNA
#N/A	JC63-00570A	SHEET-AGITATOR_D;CLP-510,PET,0.2,-,-,WHI		SNA
#N/A	JC63-00576C	COVER-M_LEFT;CLP-650,HIPS,2.5,391.0,292.		SA
#N/A	JC63-00600A	COVER-M-PAPER,C;CLP-600,HIPS,-,-,L256,-,		SNA
#N/A	JC63-00601A	COVER-M-DRAW;CLP-600,HIPS,T2.5,W21.4,L56		SNA
#N/A	JC63-00602A	COVER-M-WASTE;CLP-600,ABS ,T2,W248.5,L86		SNA
#N/A	JC63-00604A	COVER-M-DEV;CLP-600,ABS (EA0640),T2,W232		SNA
#N/A	JC63-00605A	COVER-M-SIDE,F;CLP-600,ABS,T2,W98.8,L26,		SNA
#N/A	JC63-00606A	COVER-M-SIDE, R;CLP-600,ABS,T2,W75.5,L36		SNA
#N/A	JC63-00607A	COVER-M-WASTE TONER,L;CLP-600,HIPS,T2.0,		SNA
#N/A	JC63-00608A	COVER-M-WASTE TONER,U;CLP-600,HIPS,T2.0,		SNA
#N/A	JC63-00645A	GROUND-WIRE;CLP-600,SUS304,T0.5,-,-,-,-		SNA
#N/A	JC63-00714A	SHEET-SENSOR,PTB;CLP-600,PET FILM,0.188T		SNA
#N/A	JC63-00721A	SHEET-WASTE,TONER;CLP-600,PC,0.38,77,210		SNA
#N/A	JC63-01016A	SHIELD-P-BRACKET INLET;CLP-600,SECC,T0.6		SNA
#N/A	JC63-01154A	GROUND-ROLLER;CLP-600,SUS304-CSP 1/2H,T0		SA
#N/A	JC64-00182A	HANDLE-M-PTB UNIT;CLP-600,HIPS,T2.5,W44.		SNA
#N/A	JC66-00471A	GEAR-FUSER DRIVE 1_Z47;CLP-500,POM,M90-4	G0025	SA
#N/A	JC66-00744A	GEAR-_M_DEVE CLUTCH_Z33;CLP-600,POM,M0.8	G0002	SA
#N/A	JC66-00745A	GEAR-_M_OPC DRV1_Z117;CLP-600,POM,M0.5,Z	G0016	SA
#N/A	JC66-00747A	GEAR-_M_PTB DRIVE1_Z41;CLP-600,POM,M0.6,	G0018	SA
#N/A	JC66-00748A	GEAR-_M_PTB DRIVE2_Z30;CLP-600,POM,M0.6,	G0019	SA
#N/A	JC66-00752A	GEAR-_M_FEED DRV_Z42;CLP-600,POM,M0.6,Z4	G0006	SA
#N/A	JC66-00788A	GEAR-_M_DRIVE,PTB;CLP-600,POM,M0.6,Z36,T		SNA
#N/A	JC66-00789A	GEAR-M-OPC;CLP-600,PC,M0.8,Z31,26.392,BL		SNA
#N/A	JC66-00790A	GEAR-M-AGITATOR;CLP-600,POM,M0.6,Z26,15.		SNA
#N/A	JC66-00791A	GEAR-M-DEV;CLP-600,POM,M0.6,Z19,12.132,B		SNA
#N/A	JC66-00792A	GEAR-M-DEVE DRIVE;CLP-600,POM,M0.6,M0.8,		SNA
#N/A	JC66-00793A	GEAR-M-DRSR;CLP-600,POM,M0.6,M0.6,Z18,Z2		SNA
#N/A	JC66-00794A	GEAR-M-RDCN;CLP-600,POM,M0.6,M0.6,Z17,Z2		SNA
#N/A	JC66-00795A	GEAR-M-SUPPLY;CLP-600,POM,M0.6,Z20,12.77		SNA
#N/A	JC66-00796A	SHAFT-M-AGI,B;CLP-600,PC,221.6,10.5,BLAC		SNA
#N/A	JC66-00797A	SHAFT-M-AGI,A;CLP-600,ABS,252.3,14,BLACK		SNA
#N/A	JC66-00832A	SHAFT-OPC DRIVE C,M;CLP-600,SUM24L,L58.7	S0007	SNA
#N/A	JC66-00837A	SHAFT-OPC DRIVE K,Y;CLP-600,SUM24L,L58.7	S0008	SNA
#N/A	JC66-00917A	DRUM-PTB BELT;CLP-600,PE,-,¥Õ150.5,W473,S		SNA
#N/A	JC66-00918A	ROLLER-PAPER CHARGE;CLP-600,SUM24L+URETH		SNA
#N/A	JC66-00919A	ROLLER-BACKUP,CLN;CLP-600,SUM24L+AL6063		SNA
#N/A	JC66-00920A	ROLLER-TENSION,PTB;CLP-600,SUM24L+AL6063		SNA
#N/A	JC66-00921A	ROLLER-DRIVE,PTB;CLP-600,SUM23+EPDM,¥Õ14S		SNA
#N/A	JC66-00922A	ROLLER-TRANSFER;CLP-600,SUM23+NBR FOAM,		SNA
#N/A	JC66-00923A	SHAFT-OPC HINGE,F;CLP-600,SUM24L+NI,15,4		SNA
#N/A	JC66-00924A	SHAFT-OPC HINGE,R;CLP-600,SUM24L+NI,27,5		SNA
#N/A	JC66-00925A	SHAFT-OPC;CLP-600,SUS303,316,6,SILVER,-,		SNA
#N/A	JC66-00926A	ROLLER-OPC CHARGER;CLP-600,NBR+HDR+SUM22		SNA
#N/A	JC66-00927A	ROLLER-DEVE;CLP-600,NBR+HDR+SUS303,¥Õ12+S		SNA
#N/A	JC66-00928A	DRUM-OPC;CLP-600,AL,-,OD24,L248,GREEN,PH		SNA

ITPARTS.eu

SA : SERVICE AVAILABLE SNA : SERVICE not AVAILABLE DNA : DELIVERY not AVAILABLE

Drawer#	SEC-Code	Description & Specification	Location	Service
#N/A	JC66-00929A	ROLLER-SUPPLY;CLP-600,URETHANE FOAM,¥Ó11S		SNA
#N/A	JC66-01150A	GEAR-IDLE OPC_Z51;CLP-600,POM,M0.5,Z51,-		SNA
#N/A	JC66-01198A	SHAFT-OPC DRIVE C;CLP-600,SUM24L,L58.7,		SNA
#N/A	JC66-01199A	SHAFT-OPC DRIVE K;CLP-600,SUM24L,L58.7,		SNA
#N/A	JC66-01300A	LEVER-FUSER FRAME;CLP-600,PET GF30%,T2.0		SNA
#N/A	JC68-00690A	MANUAL-(CARD)WARRANTY CARD;ML-1210,XEU,E		SNA
#N/A	JC68-00966A	MANUAL-WARRANTY_CARD;COMMON,XST,THAILAND		SNA
#N/A	JC68-00967A	MANUAL-WARRANTY_CARD;COMMON,XSE,INDONESI		SNA
#N/A	JC68-01154A	LABEL(R)-POP(A);COMMON,-,PC+HOLOGRAM,T0.		SNA
#N/A	JC68-01245A	MANUAL-WARRANTY CARD;COMMON,XSG,ARABIC,U		SNA
#N/A	JC68-01540A	MANUAL-SHEET DEVE;COMMON,-,ENGLISH,-,ART		SNA
#N/A	JC68-01554A	LABEL(R)-OPEN CLOSE;COMMON,KOREA,YUPO-10		SNA
#N/A	JC68-01584A	LABEL(P)-BLANK 90*25;CLP-510,SEE,ART 100	D2120	SA
#N/A	JC68-01700A	LABEL-INFORMATION;CLP-650,-,PVC,0.05T,8M		SNA
#N/A	JC68-10914D	LABEL(P)-SERIAL NO;ML-85,ART,70X15,G100,		SNA
#N/A	JC68-10914E	LABEL SERIAL-YELLOW;COMMON,SEC,ART,0.1,7		SNA
#N/A	JC68-10914F	LABEL SERIAL-CYAN;COMMON,SEC,ART,0.1,70,		SNA
#N/A	JC68-10914G	LABEL SERIAL-MAGENTA;COMMON,SEC,ART,0.1,		SNA
#N/A	JC68-10932A	LABEL(P)-BLANK(ML);ML-85,ART,70X60,G100,		SNA
#N/A	JC69-00736A	CUSHION-SET MAIN;CLP-600,-,W616,L549,H23		SNA
#N/A	JC69-00857A	CUSHION-SET CAP;CLP-600,-,616,547,37,130		SNA
#N/A	JC69-00859A	PAD-DEVE CAP;CLP-600,5,280,203,-,WHT,6,-		SNA
#N/A	JC71-00002A	NPR-EARTH OPC APOLLO;SF-5100,C5210P-H,0.		SNA
#N/A	JC72-01064A	PMO-HUB CLUTCH;CLP-500,POM,BLACK,-,DE890	P0040	SA
#N/A	JC72-01232A	PMO-DUMMY CLUTCH;CLP-500,POM,WHITE,-,DEL	P0038	SA
#N/A	JC72-01234A	PMO-DEVE CAP TONER;CLP-500,PP,BLACK,-,H5		SNA
#N/A	JC73-10017A	RPR-SEAL_BLOCK;ML-80,POLYURETHANE FOAM,T		SNA
#N/A	JC74-10901A	MPR-WASHER SUPPLY;ML-5000,POLY,ID4.1*OD1		SNA
#N/A	JC92-01663A	PBA SUB-K_CRUM;CLP-600,SEC,KOREA,K_CRUM,		SNA
#N/A	JC92-01664A	PBA SUB-C_CRUM;CLP-600,SEC,KOREA,C_CRUM,		SNA
#N/A	JC92-01665A	PBA SUB;CLP-600,SEC,KOREA,M_CRUM,37*16MM		SNA
#N/A	JC92-01666A	PBA SUB-Y_CRUM;CLP-600,SEC,KOREA,Y_CRUM,		SNA
#N/A	JC92-01759A	PBA MAIN-PDL;CLP-650,SEC,KOREA,230*165*1		SA
#N/A	JC92-01787A	PBA SUB-SODIMM;CLP-650,SEC,KOREA,67.5*31		SA
#N/A	JC96-03798A	ELA UNIT-CR_CRUM;CLP-600,SEC,KOREA,-,-,-		SNA
#N/A	JC97-02245A	MEA UNIT-CLN BLADE;CLP-600,SEC,SECC 1.2T		SNA
#N/A	JC97-02246A	MEA UNIT-SUS BLADE;CLP-600,SEC,SECC 1.2T		SNA
#N/A	JC97-02247A	MEA UNIT-CLEANING,PTB;CLP-600,-,SECC+URE		SNA
#N/A	JC97-02682A	MEA UNIT-TUBE;CLP-600,SEC,EXPORT,-,-,-,-		SNA
#N/A	0202-001240	SOLDER-WIRE;HSE-01,-,D3,SN/0.5CU/0.03NI/		SNA
#N/A	0202-001492	SOLDER-WIRE FLUX;HSE-02 LFM48 SR-34 S,-,		SNA
#N/A	0204-000469	THINNER;#4662,-,0.795,-		SNA
#N/A	0204-002978	FLUX;KSP-70M,-,84%,FLUX,SPRAY		SNA
#N/A	0601-000003	LED;ROUND,RED/GRN,3.1MM,650/563NM,3.8X5.		SA
#N/A	0601-001383	LED;ROUND,RED,3.0MM,700NM		SNA
#N/A	1103-001115	IC-EEPROM;24C32,4Kx8BIT,DIP,8P,300MIL,10		SNA
#N/A	2801-003321	CRYSTAL-UNIT;14.31818MHZ,20PPM,ATS-49/U,		SNA
#N/A	2801-003886	CRYSTAL-UNIT;12MHz,50ppm,28-AAA,16pF,50o		SNA
#N/A	2801-004451	CRYSTAL-UNIT;31.00504519MHZ,50PPM,49/S-4		SA
#N/A	3404-000165	SWITCH-TACT;12V,50mA,160gf,6x6mm,SPST	D2158	SA
#N/A	3501-001263	RELAY-POWER;5V,530mW,10000mA,1FormA,7mS,		SA
#N/A	3702-000118	CONNECTOR-RIBBON;36P,FEMALE,ANGLE,AU		SNA
#N/A	3704-000349	SOCKET-IC;8P,DIP,SN,2.54MM		SNA
#N/A	3711-000198	HEADER-BOARD TO CABLE;1WALL,3P,1R,2.5MM,		SA
#N/A	3711-000203	HEADER-BOARD TO CABLE;1WALL,2P/3P,1R,7.9		SA
#N/A	3711-000840	HEADER-BOARD TO CABLE;BOX,30P,2R,2MM,STR		DNA
#N/A	3711-002000	HEADER-BOARD TO CABLE;BOX,18P,2R,2mm,STR		SNA

SA : SERVICE AVAILABLE SNA : SERVICE not AVAILABLE DNA : DELIVERY not AVAILABLE

Drawer#	SEC-Code	Description & Specification	Location	Service
#N/A	3711-002807	HEADER-BOARD TO CABLE;BOX,6P,1R,2mm,STRA		SNA
#N/A	3711-002808	HEADER-BOARD TO CABLE;BOX,7P,1R,2mm,STRA		SNA
#N/A	3711-002811	HEADER-BOARD TO CABLE;BOX,10P,1R,2mm,STR		SNA
#N/A	3711-002813	HEADER-BOARD TO CABLE;BOX,12P,1R,2mm,STR		SA
#N/A	3711-003035	HEADER-BOARD TO CABLE;BOX,14P,2R,2mm,STR		SA
#N/A	3711-003408	HEADER-BOARD TO CABLE;BOX,2P,1R,2mm,STRA		SNA
#N/A	3711-003409	HEADER-BOARD TO CABLE;BOX,3P,1R,2mm,STRA		SNA
#N/A	3711-003410	HEADER-BOARD TO CABLE;BOX,4P,1R,2mm,STRA		SNA
#N/A	3711-003411	HEADER-BOARD TO CABLE;BOX,5P,1R,2mm,STRA		SNA
#N/A	3711-003942	HEADER-BOARD TO CABLE;BOX,2P,1R,2mm,STRA		SA
#N/A	3711-003981	HEADER-BOARD TO CABLE;BOX,28P,2R,2mm,STR		SA
#N/A	3711-004349	HEADER-BOARD TO CABLE;BOX,3P,1R,2mm,STRA		SA
#N/A	3711-004379	HEADER-BOARD TO CABLE;BOX,4P,1R,2mm,STRA		SA
#N/A	3722-000124	JACK-DIN;8P,-,AU,BLK,-		SNA
#N/A	3722-002303	JACK-USB;4P/1C,AU30U,BLK,ANGLE,B TYPE		SA
#N/A	6601-001340	BEARING-BALL;6808ZZ,ID40,OD52,L7,SUJ2,-	B0001	SNA
#N/A	6601-001341	BEARING-BALL;688ZZ,ID8,OD16,L5,SUJ2,-	B0002	SA
#N/A	6902-000444	BAG PE;T0.05,W250,L250,TRP,28,2,3-PE MAR		SNA
#N/A	JB68-00073A	LABEL(R)-BAR CODE;SF-3000,PY,38X6.5,T0.1		SNA
#N/A	JC07-00003A	LCD-DISPLAY(XEV);VHX1620BHRC9,SCX-5312F/	D2159	SA
#N/A	JC39-00306A	CBF HARNESS-LCD;CLP-500,WIRE,UL2877,14-1		SA
#N/A	JC39-00399A	CBF HARNESS-PANEL;CLP-600,WIRE HARENSS,U		SNA
#N/A	JC39-00425A	CBF HARNESS-SET_CR2;CLP-600,CBF HARNESS,		SA
#N/A	JC39-00429A	CBF HARNESS-TH_NEW;CLP-600,CBF HARNESS,U		SA
#N/A	JC39-00508A	CBF HARNESS-GND2;CLP-600,CBF HARNESS,UL1		SA
#N/A	JC61-01109A	BRACKET-P-CLN,PTB;CLP-600,SECC,T1.2,W16.		SNA
#N/A	JC61-01111A	HOLDER-M-CRUM;CLP-600,ABS,3,W11,L12.15,B		SNA
#N/A	JC61-01120A	PLATE-P-CRUM;CLP-600,C1720,T0.15,W2,L5.2		SNA
#N/A	JC61-01121A	BRACKET-P-SUS BLADE;CLP-600,SECC,T1.0,W2		SNA
#N/A	JC61-01122A	BRACKET-P-CLEANING;CLP-600,SECC,1.2,230,		SNA
#N/A	JC61-01123A	BLADE-DOCTOR;CLP-600,SUS301-CSP 1/2H,-,W		SNA
#N/A	JC61-01144A	BUSH-_M_BALL BEARING;CLP-600,PPS,ID34.6,	B0021	SNA
#N/A	JC61-01280A	BLADE-CLEANING,PTB;CLP-600,URETHANE,-,W1		SNA
#N/A	JC61-01282A	BLADE-CLEANING;CLP-600,URETHAN,TRP,W11*L		SNA
#N/A	JC61-01445A	FIXER-P-INNER PIPE;CLP-600,SUS 304,T0.3,		SNA
#N/A	JC61-01446A	FIXER-M INNER CAP;CLP-600,PPS+GF40%,T2.5		SNA
#N/A	JC61-01447A	SUPPORT-P-TENSION KEY;CLP-600,SUS,T0.5,R		SNA
#N/A	JC61-01448A	FIXER-M INNER PIPE KEY;CLP-600,PPS+GF40%		SNA
#N/A	JC62-00142A	HEAT SINK-P-MC2;SCX-6320F,BRONZE,0.5,7,2		SNA
#N/A	JC62-00309A	TUBE-BLOWER;CLP-600,POLYETHYLENE,-,OD14.		SNA
#N/A	JC63-00186A	SHEET-GUIDE ADF;SCX-6320F,PET,0.125T,-,-		SA
#N/A	JC63-00896A	FILTER-TONER;CLP-600,POLYESTERE,10.0T,W2		SA
#N/A	JC63-00904A	SHEET-FILTER TONER;CLP-600,PET,T0.125,W2		SA
#N/A	JC63-01029A	SHEET-PTB CLEANING;CLP-600,PET,T0.188,W1		SA
#N/A	JC66-00800A	ROLLER-PRESSURE;CLP-600,STKM+RUBBER,D36.	R0016	SA
#N/A	JC66-01039A	GEAR-M_CAP;CLP-600,PPS+GF40%,1,36,19.8,B		SNA
#N/A	JC66-01239A	ROLLER-HEAT IH;CLP-600,STKM,36.4,L254,-,		SNA
#N/A	JC67-00104A	BRUSH-CARBON;ML-3560,SM190,-,D9,9.5,-,-	B0020	SNA
#N/A	JC67-00129A	CAP-M_END;CLP-600,PPS+GF40%,T2,14.2,¨ª34S		SNA
#N/A	JC68-01727A	MANUAL-INFORMATION;CLP-650,SEC,21LANG,WO		SNA
#N/A	JC71-00051A	ELECTRODE-FU;ML-3560,T5.5,-,D28,SME19		SNA
#N/A	JC71-00052A	ELECTRODE-P-SUPPORT;ML-3560,T0.2,-,D27.6		SNA
#N/A	JC72-01376A	SPONGE-COVER LSU;CLP-600,POLYESTERE,-,T0		SNA
#N/A	JC72-01378A	SPONGE-FRAME LOWER;CLP-600,POLYESTERE,-,		SNA
#N/A	JC72-01379A	SPONGE-SEALING_LSU;CLP-600,POLYESTERE,-,		SNA
#N/A	JC92-01667A	PBA SUB-PTB_CRUM;CLP-600,SEC,KOREA,PTB_C		SNA
#N/A	JC92-01668A	PBA SUB-COLOR_REGI;CLP-600,SEC,KOREA,COL		SNA

SA : SERVICE AVAILABLE SNA : SERVICE not AVAILABLE DNA : DELIVERY not AVAILABLE

Drawer#	SEC-Code	Description & Specification	Location	Service
#N/A	JC94-01058A	PHANTOM AU JC92-01659A		SNA
#N/A	JC94-01064A	PHANTOM AU JC92-01663A		SNA
#N/A	JC94-01065A	PHANTOM AU JC92-01664A		SNA
#N/A	JC94-01066A	PHANTOM AU JC92-01665A		SNA
#N/A	JC94-01067A	PHANTOM AU JC92-01666A		SNA
#N/A	JC94-01072A	PHANTOM AU JC92-01675A		SNA
#N/A	JC94-01113A	PHANTOM AU JC92-01759A		SNA
#N/A	JC94-01114A	PHANTOM AU JC92-01787A		SNA
#N/A	JC97-02404A	MEA UNIT-GUIDE PAPER;CLP-600,SEC,EXPORT,	M0016	SA
#N/A	0201-001235	ADHESIVE-TS;DEH-390D,RED,400,-		SNA
#N/A	0202-001459	SOLDER-CREAM;S3X58-M405,-,D20~38§-,96.5SS		SNA
#N/A	0401-000116	DIODE-SWITCHING;MMSD914T1,100V,200MA,SOD		SNA
#N/A	0402-000129	DIODE-RECTIFIER;1N4003,200V,1A,DO-41,TP		SA
#N/A	0402-001189	DIODE-RECTIFIER;M4,400V,1A,TS-1,TP		SA
#N/A	0404-001084	DIODE-SCHOTTKY;BAT54A,30V,200MA,SOT-23,T		SA
#N/A	0407-000101	DIODE-ARRAY;DA204K,20V,100mA,C2-3,SOT-23		SA
#N/A	0407-000122	DIODE-ARRAY;KDS226,80V,300mA,C2-3,SOT-23		SA
#N/A	0501-000010	TR-SMALL SIGNAL;KSC1008,NPN,800mW,TO-92,		SA
#N/A	0501-000279	TR-SMALL SIGNAL;KSA1182-Y,PNP,150mW,SOT-		SA
#N/A	0501-000294	TR-SMALL SIGNAL;KSA708-Y,PNP,800mW,TO-92		SA
#N/A	0501-000457	TR-SMALL SIGNAL;MMBT2222A,NPN,350mW,SOT-		SA
#N/A	0505-001350	FET-SILICON;NDT2955,P,-60V,-2.5V,0.3OHM,		SA
#N/A	0505-001592	FET-SILICON;SI4542DY,N/P,30V/-30V,6.9A/6		SNA
#N/A	0505-001824	FET-SILICON;FDS6690AS,N,30V,10A,0.012ohm		SNA
#N/A	0601-001830	LED;SMD,GRN,1.6x0.8x0.4mm,570nm,1.6x0.8x		SA
#N/A	0801-000794	IC-CMOS LOGIC;7S08,AND GATE,SOT-25,5,63M		SA
#N/A	0801-002326	IC-CMOS LOGIC;74LCX32,OR GATE,TSSOP,14,1		SA
#N/A	0801-002395	IC-CMOS LOGIC;74LCX373,LATCH,TSSOP,20P,1		SNA
#N/A	0801-002446	IC-CMOS LOGIC;74LCX14,SCHMITT INVERTER,T		SNA
#N/A	0801-002567	IC-CMOS LOGIC;74HCT273,D FLIP FLOP,SOP,2		SNA
#N/A	0803-003263	IC-CMOS LOGIC;74LCX07,HEX BUFFER,SOIC,14		SA
#N/A	0803-003264	IC-CMOS LOGIC;74LCX06,HEX INVERTER/BUFFE		SNA
#N/A	0902-001933	IC-MICROPROCESSOR;RM7065C,600MHZ,-,EPAD,		SA
#N/A	0904-001989	IC-USC;ISP1582BS,-,HVQFN56,56P,8X8X0.85M		SA
#N/A	0904-002075	IC-BUS CONTROLLER;MV64420,-,TQFP,932P,35		SNA
#N/A	1001-000170	IC-ANALOG SWITCH;MC14051BD,SPDT CMOS,SOP		SA
#N/A	1003-001535	IC-MOTOR DRIVER;A3977SLP,TSSOP,28P,9.6X4		SA
#N/A	1003-001695	IC-CLOCK DRIVER;95V857AGLF,TSSOP,48P,244		SNA
#N/A	1003-001917	IC-CLOCK DRIVER;ICS445R-37LFT,SSOP,20P,8		SNA
#N/A	1006-001224	IC-LINE TRANSCEIVER;74LVX161284,TSSOP,48		SA
#N/A	1006-001316	IC-LINE DRIVER;FIN1047M,SOP,16P,10X6MM,-		SNA
#N/A	1103-001325	IC-EEPROM;34(F)C02-LF,256X8BIT,TSSOP,8P,		SNA
#N/A	1105-001580	IC-DRAM;HYB25D(C)512160,-,512Mbit,32Mx16		SA
#N/A	1107-001589	IC-FLASH MEMORY;-,128MBIT,16MX8/8MX16BIT		SNA
#N/A	1201-000167	IC-OP AMP;358,SOP,TP,8P,150MIL,DUAL,100V		SNA
#N/A	1202-000164	IC-VOLTAGE COMP.;393,SOP,8P,150MIL,DUAL,		SA
#N/A	1203-002166	IC-POSI.FIXED REG.;1117DT25,DPAK,4P,240M		SNA
#N/A	1203-002233	IC-RESET;XC61F,SOT-23,3P,-,PLASTIC,0.7/1		SNA
#N/A	1203-002454	IC-POSI.FIXED REG.;FAN1117A,TO-252,3P,25		SA
#N/A	1203-003739	IC-DC/DC CONVERTER;MVPG31,DFN,12P,4X3MM,		SNA
#N/A	1203-003774	IC-DC/DC CONVERTER;SC4603,MSOP,10P,3X3MM		SNA
#N/A	1203-004071	IC-PWM CONTROLLER;FAN5026,TSSOP,28P,9.7X		SNA
#N/A	1205-002339	IC-CLOCK GENERATOR;CY25811SC,SOIC,8P,150		SA
#N/A	1205-002660	IC-CLOCK GENERATOR;ICS9248-81,SSOP,48P,3		SNA
#N/A	2005-000168	R-WIRE WOUND,NON;0.22ohm,5%,2W,AA,BK,4x1		SA
#N/A	2007-000033	R-CHIP;0ohm,5%,1/4W,TP,3216		SA
#N/A	2007-000043	R-CHIP;1Kohm,1%,1/10W,TP,1608		SA

SA : SERVICE AVAILABLE SNA : SERVICE not AVAILABLE DNA : DELIVERY not AVAILABLE

Drawer#	SEC-Code	Description & Specification	Location	Service
#N/A	2007-000052	R-CHIP;10Kohm,1%,1/10W,TP,1608		SA
#N/A	2007-000067	R-CHIP;15Kohm,1%,1/10W,TP,1608		SA
#N/A	2007-000069	R-CHIP;1OHM,1%,1/4W,TP,3216		SNA
#N/A	2007-000070	R-CHIP;0ohm,5%,1/10W,TP,1608		SA
#N/A	2007-000071	R-CHIP;22ohm,5%,1/10W,TP,1608		SA
#N/A	2007-000074	R-CHIP;100ohm,5%,1/10W,TP,1608		SA
#N/A	2007-000077	R-CHIP;470ohm,5%,1/10W,TP,1608		SA
#N/A	2007-000078	R-CHIP;1Kohm,5%,1/10W,TP,1608		SA
#N/A	2007-000079	R-CHIP;1.8Kohm,5%,1/10W,TP,1608		SA
#N/A	2007-000080	R-CHIP;2Kohm,5%,1/10W,TP,1608		SA
#N/A	2007-000082	R-CHIP;3.3Kohm,5%,1/10W,TP,1608		SA
#N/A	2007-000083	R-CHIP;3Kohm,5%,1/10W,TP,1608		SA
#N/A	2007-000084	R-CHIP;4.7Kohm,5%,1/10W,TP,1608		SA
#N/A	2007-000086	R-CHIP;5.6Kohm,5%,1/10W,TP,1608		SA
#N/A	2007-000090	R-CHIP;10Kohm,5%,1/10W,TP,1608		SA
#N/A	2007-000092	R-CHIP;15Kohm,5%,1/10W,TP,1608		SA
#N/A	2007-000093	R-CHIP;20Kohm,5%,1/10W,TP,1608		SA
#N/A	2007-000094	R-CHIP;22Kohm,5%,1/10W,TP,1608		SA
#N/A	2007-000096	R-CHIP;30Kohm,5%,1/10W,TP,1608		SA
#N/A	2007-000098	R-CHIP;56Kohm,5%,1/10W,TP,1608		SA
#N/A	2007-000100	R-CHIP;68Kohm,5%,1/10W,TP,1608		SA
#N/A	2007-000102	R-CHIP;100Kohm,5%,1/10W,TP,1608		SA
#N/A	2007-000104	R-CHIP;150Kohm,5%,1/10W,TP,1608		SA
#N/A	2007-000105	R-CHIP;200Kohm,5%,1/10W,TP,1608		SA
#N/A	2007-000109	R-CHIP;1Mohm,5%,1/10W,TP,1608		SA
#N/A	2007-000113	R-CHIP;33ohm,5%,1/10W,TP,1608		SA
#N/A	2007-000116	R-CHIP;120ohm,5%,1/10W,TP,1608		SA
#N/A	2007-000122	R-CHIP;1.2Kohm,5%,1/10W,TP,1608		SA
#N/A	2007-000123	R-CHIP;1.5Kohm,5%,1/10W,TP,1608		SA
#N/A	2007-000134	R-CHIP;33Kohm,5%,1/10W,TP,1608		SA
#N/A	2007-000239	R-CHIP;1.5Kohm,1%,1/10W,TP,1608		SA
#N/A	2007-000287	R-CHIP;100OHM,1%,1/10W,TP,1608		SA
#N/A	2007-000309	R-CHIP;10ohm,5%,1/10W,TP,1608		SA
#N/A	2007-000312	R-CHIP;10ohm,5%,1/4W,TP,3216		SA
#N/A	2007-000539	R-CHIP;200ohm,5%,1/10W,TP,1608		SA
#N/A	2007-000608	R-CHIP;240ohm,5%,1/10W,TP,1608		SA
#N/A	2007-000669	R-CHIP;2Kohm,1%,1/10W,TP,1608		SA
#N/A	2007-000839	R-CHIP;39ohm,5%,1/10W,TP,1608		SA
#N/A	2007-000965	R-CHIP;5.1Kohm,5%,1/10W,TP,1608		SA
#N/A	2007-001002	R-CHIP;510ohm,5%,1/10W,TP,1608		SA
#N/A	2007-001014	R-CHIP;51OHM,5%,1/10W,TP,1608		SA
#N/A	2007-001044	R-CHIP;56ohm,5%,1/10W,TP,1608		SNA
#N/A	2007-001134	R-CHIP;68ohm,5%,1/10W,TP,1608		SA
#N/A	2007-001161	R-CHIP;75Kohm,5%,1/10W,TP,1608		SNA
#N/A	2007-001179	R-CHIP;8.2Kohm,5%,1/10W,TP,1608		SA
#N/A	2007-002901	R-CHIP;12.1Kohm,1%,1/10W,TP,1608		SA
#N/A	2007-002910	R-CHIP;30.1Kohm,1%,1/10W,TP,1608		SA
#N/A	2007-007239	R-CHIP;31.6Kohm,1%,1/10W,TP,1608		SNA
#N/A	2007-007276	R-CHIP;178ohm,1%,1/10W,TP,1608		SNA
#N/A	2007-007507	R-CHIP;2.74Kohm,1%,1/10W,TP,1608		SNA
#N/A	2007-007937	R-CHIP;17.4Kohm,1%,1/10W,TP,1608		SNA
#N/A	2007-007967	R-CHIP;5.23Kohm,1%,1/10W,TP,1608		SNA
#N/A	2007-008315	R-CHIP;4.99ohm,1%,1/10W,TP,1608		SNA
#N/A	2007-008499	R-CHIP;1.54K ohm,1%,1/10W,TP,1608		SNA
#N/A	2007-008505	R-CHIP;17.8Kohm,1%,1/10W,TP,1608		SNA
#N/A	2007-008553	R-CHIP;29.4Kohm,1%,1/10W,TP,1608		SNA
#N/A	2011-000660	R-NET;1Kohm,5%,1/16W,L,CHIP,8P,TP,3.2x1.		SA

ITexpress.eu

SA : SERVICE AVAILABLE SNA : SERVICE not AVAILABLE DNA : DELIVERY not AVAILABLE

Drawer#	SEC-Code	Description & Specification	Location	Service
#N/A	2011-000881	R-NET;33ohm,5%,1/16W,L,CHIP,8P,TP,3.2x1.		SA
#N/A	2011-001011	R-NET;10Kohm,5%,1/16W,L,CHIP,8P,TP,3.2x1		SNA
#N/A	2011-001094	R-NET;39OHM,5%,1/16W,L,CHIP,8P,TP		SA
#N/A	2011-001097	R-NET;5.1KOHM,5%,1/16W,L,CHIP,8P,TP		SNA
#N/A	2011-001193	R-NET;68ohm,5%,1/16W,L,CHIP,8P,TP		SA
#N/A	2011-001256	R-NET;200ohm,5%,1/16W,L,CHIP,8P,TP		SA
#N/A	2011-001261	R-NET;33ohm,5%,1/16W,L,CHIP,8P,TP,2.0x1.		SA
#N/A	2011-001334	RC-NETWORK;1K/5.1K/39ohm,10%,150pF,-,6V,		SNA
#N/A	2011-001402	R-NET;56ohm,5%,1/16W,L,CHIP,8P,TP,2.0X1.		SA
#N/A	2011-001449	R-NET;22OHM,5%,1/16W,L,-,4P,TP,1010		SA
#N/A	2203-000160	C-CER,CHIP;0.0015NF,0.25PF,50V,C0G,TP,16		SA
#N/A	2203-000189	C-CER,CHIP;100nF,+80-20%,25V,Y5V,1608		SA
#N/A	2203-000192	C-CER,CHIP;100nF,+80-20%,50V,Y5V,2012		SA
#N/A	2203-000236	C-CER,CHIP;0.1nF,5%,50V,C0G,1608		SA
#N/A	2203-000257	C-CER,CHIP;10nF,10%,50V,X7R,1608		SA
#N/A	2203-000332	C-CER,CHIP;0.012nF,5%,50V,C0G,1608		SNA
#N/A	2203-000426	C-CER,CHIP;0.018nF,5%,50V,C0G,1608		SA
#N/A	2203-000440	C-CER,CHIP;1nF,10%,50V,X7R,1608		SA
#N/A	2203-000626	C-CER,CHIP;0.022nF,5%,50V,C0G,1608		SA
#N/A	2203-000783	C-CER,CHIP;0.33nF,5%,50V,C0G,1608		SA
#N/A	2203-000815	C-CER,CHIP;0.033nF,5%,50V,C0G,1608		SA
#N/A	2203-000998	C-CER,CHIP;0.047nF,5%,50V,C0G,1608		SA
#N/A	2203-001086	C-CER,CHIP;0.0050nF,0.25pF,50V,NP0,1608		SA
#N/A	2203-001598	C-CER,CHIP;2200nF,+80-20%,16V,Y5V,2012		SA
#N/A	2203-001607	C-CER,CHIP;0.22nF,5%,50V,NP0,1608		SA
#N/A	2203-002392	C-CER,CHIP;220nF,+80-20%,50V,Y5V,2012		SA
#N/A	2203-005105	C-CER,CHIP;0.68nF,5%,50V,C0G,1608		SA
#N/A	2203-005249	C-CER,CHIP;100nF,10%,50V,X7R,1608		SNA
#N/A	2203-005819	C-CER,CHIP;1000nF,+80-20%,16V,Y5V,-,1608		SNA
#N/A	2203-006676	C-CER,CHIP;10000NF,+80TO-20%,10V,Y5V,201		SNA
#N/A	2203-006818	C-CER,CHIP;47000nF,20%,6.3V,X5R,3216		SA
#N/A	2401-000207	C-AL;100uF,20%,50V,WT,TP,8x12,5		SNA
#N/A	2401-002300	C-AL;47uF,20%,50V,GP,TP,6.3x11,5		SA
#N/A	2401-004099	C-AL;330UF,20%,6.3V,NXB,TP,6.3X11MM,5		SA
#N/A	2402-000008	C-AL,SMD;47uF,20%,16V,GP,TP,6.6x6.6x5.4		SA
#N/A	2402-000117	C-AL,SMD;10uF,20%,35V,GP,TP,5.3x5.3x5.4		SA
#N/A	2402-001042	C-AL,SMD;100uF,20%,16V,GP,TP,6.6x6.6x5.4		SA
#N/A	2402-001049	C-AL,SMD;10uF,20%,16V,GP,TP,3.3x3.3x5.4		SA
#N/A	2402-001106	C-AL,SMD;33UF,20%,50V,WT,TP,8.3X8.3X6.3M		SA
#N/A	2402-001127	C-ORGANIC;220UF,20%,6.3V,-,TP,7343		SNA
#N/A	2404-000284	C-TA,CHIP;10uF,20%,16V,-,TP,3528		SA
#N/A	2404-001102	C-TA,CHIP;33uF,20%,16V,GP,TP,6032,-		SNA
#N/A	2503-001051	C-NETWORK;100NFX4,20%,16V,-,2012, 4ARRAY		SA
#N/A	2703-002055	INDUCTOR-SMD;2.2UH,20%,6363		SNA
#N/A	2703-002539	INDUCTOR-SMD;6.8uH,20%,6965		SNA
#N/A	2703-002871	INDUCTOR-SMD;0.82uH,20%,6965		SNA
#N/A	2802-001069	RESONATOR-CERAMIC;7.37MHz,0.5%,TP,4.7x4.		SNA
#N/A	2901-001178	FILTER-EMI SMD;25V,2A,-,100000pF,2x1.25x		SA
#N/A	3301-000317	BEAD-SMD;120ohm,2012,TP,-,-		SA
#N/A	3301-000325	BEAD-SMD;60ohm,3.2x2.5x1.3mm,400mA,TP,,,		SNA
#N/A	3301-000344	BEAD-RADIAL;200ohm,3.5x0.6x6.5mm,7000mA,		SNA
#N/A	3301-001067	BEAD-SMD;600OHM,1608,-,-,-		SNA
#N/A	3301-001240	BEAD-SMD;120ohm,1608,200mA,,393ohm/305MH		SNA
#N/A	3301-001270	BEAD-SMD;120ohm,3216,150mA,TP,,,0.2ohm		SNA
#N/A	3301-001655	BEAD-SMD;33ohm,3216,3000mA,TP,16ohm/39MH		SA
#N/A	3704-001176	SOCKET-IC;200P,SO DIMM,AUF,0.6MM		SA
#N/A	3709-001320	CONNECTOR-CARD EDGE;200,0.6mm,-,AUF,SODI		SA

ITSELECTRONICS.eu

SA : SERVICE AVAILABLE SNA : SERVICE not AVAILABLE DNA : DELIVERY not AVAILABLE

Drawer#	SEC-Code	Description & Specification	Location	Service
#N/A	3711-004487	HEADER-BOARD TO BOARD;BOX,80P,2R,0.8MM,S		SA
#N/A	6009-001396	SCREW-SPECIAL;PH,+,-,M3,L10.3,ZPC(BLK),S		SNA
#N/A	6044-000125	RING-E;ID4,OD9,T0.6,PASS,STSC	R0004	SA
#N/A	JB13-00004A	IC ASIC-OPE;SF-3100,HT48C5,SSOP,48P,16.1		SA
#N/A	JC13-00029A	IC ASIC-DAVINCI;LPEC2,CLP-600,208,3.3V,-		SA
#N/A	JC13-00030A	IC ASIC-HYPER_C;HYPER-C,CLP-600,256,3.3V		SA
#N/A	JC39-00421A	CBF HARNESS-SOLENOID;CLP-600,CBF HARNESS		SA
#N/A	JC39-00422A	CBF HARNESS-SET_CR;CLP-600,CBF HARNESS,U		SA
#N/A	JC39-00575A	CBF HARNESS-FAN;CLP-600,CBF-HARNESS,UL10		SA
#N/A	JC39-00584A	HARNESS-IH FUSER;CLP-650,Wire Harness,UL		SA
#N/A	JC39-00588A	HARNESS-TEMP;CLP-600,WIRE HARNESS,UL1061		SA
#N/A	JC41-00263A	PCB SUB-DRIVER;CLP-600,FR-4,2L,-,1.6T,12		SNA
#N/A	JC41-00265A	PCB SUB-DEVE_CRUM;CLP-600,FR-4,2L,-,1.6T		SNA
#N/A	JC41-00274A	PCB SUB-LCD_PANEL;CLP-600, FR-1,1,-,1.6T		SNA
#N/A	JC41-00331A	PCB-MAIN;CLP-650,FR4,6L,-,1.6T,165*230,-		SNA
#N/A	JC41-00332A	PCB-RAM DIMM;CLP-650,FR4,6L,-,1.6T,162.2		SNA
#N/A	JC61-00995A	BRACKET-P-DRAW_PTB;CLP-600,SECC,T1.0,W45		SNA
#N/A	JC61-01017A	HOLDER-_M_MIDDLE PART;CLP-600,PET+GF30%,		SA
#N/A	JC70-10961A	IPR-TERMINAL FU;ML-165,C5210P,-,T0.3,-,-	K3422	SA
#N/A	JC72-01140A	PMO-COVER FUSER AC;CLP-500,PBT+GF30%,BLA	Z2607	SA
#N/A	JC72-01377A	SPONGE-FAN;CLP-600,POLYESTERE,-,T3.8,W18		SNA
#N/A	JC73-00226A	RUBBER-PICK UP;CLP-600,EPDM+IR,-,30,-,GR		SA
#N/A	JC94-01061A	PHANTOM AU JC92-01660A		SNA
#N/A	JC94-01068A	PHANTOM AU JC92-01667A		SNA
#N/A	JC94-01069A	PHANTOM AU JC92-01668A		SNA
#N/A	JC94-01107A	1		SNA
#N/A	JC96-02686B	ELA UNIT-ROLLER P/UP MP;ML-3560,XEROX/SE	K3144	SA
#N/A	JC97-02150A	MEA UNIT-REGI;CLP-600,SEC,EXPORT,-,-,-,-		SA
#N/A	0205-001067	GREASE-GRAPHITE;NYOGEL 756G,HYDRO CARBON		SNA
#N/A	1103-001183	IC-EEPROM;24C04,512x8,SOP,8P,5x4mm,2.5/5		SA
#N/A	1404-001141	THERMISTOR-NTC;5.6Kohm,5%,3200K,2.1mW/C,		SNA
#N/A	6044-000231	RING-E;ID5.0,OD11.0,T0.6,PASS,STS304	R0006	SA
#N/A	JC39-00420A	CBF HARNESS-FEED;CLP-600,CBF HARNESS,UL1		SA
#N/A	JC39-00427A	CBF HARNESS-DEVE_IF;CLP-600,CBF HARNESS,		SA
#N/A	JC39-00430A	CBF HARNESS-FCF_EMPT;CLP-600,CBF HARNESS		SA
#N/A	JC41-00169A	PCB-TEMPERATURE;CLP-500,FR-1,1L,-,1.6,22		SNA
#N/A	JC41-00225A	PCB SUB-GINKGO_ITB;CLP-500,FR-4,2L,-,1.6		SNA
#N/A	JC41-00266A	PCB SUB-COLOR_REGI;CLP-600,FR-1,1L,-,1.6		SNA
#N/A	JC61-00705A	HOLDER-M-PICKUP MP;ML-2150,POM,-,-,-,BLK	P2062	SA
#N/A	JC61-01550A	STOPPER-SPACER;ML-3560,PC,T0.5,-,-,BLACK		SNA
#N/A	JC61-70929A	SPRING ETC-HV LARGE;ML-5000A,SUS304-WPB,		SA
#N/A	JC70-40912A	ICT-SHAFT HV LARGE;ML-5000A,SWCH18A,-,¥÷	O1100	SA
#N/A	JC94-01062A	PHANTOM AU JC92-01661A		SNA
#N/A	JC94-01063A	PHANTOM AU JC92-01662A		SNA
#N/A	JC94-01070A	PHANTOM AU JC92-01671A		SNA
#N/A	2001-000281	R-CARBON;100OHM,5%,1/8W,AA,TP,1.8X3.2MM		SA
#N/A	3711-005851	HEADER-BATTERY;NOWALL,2P,1R,4.25MM,BATTE		SA
#N/A	JC41-00133A	PCB-SENSOR;SCX-5100,FR-1,1L,-,1.6T,22X12		SNA
#N/A	JC41-00264A	PCB SUB-DEVE_CRUM_IF;CLP-600,FR-1,1L,-,1		SNA

ITSfree.eu